For CONTENTS, see pp. iii and iv of Cover.

pp. 331-402.] [October 30, 1916.

TROPICAL DISEASES BULLETIN

Vol. 8. 1916. No. 6.

IMPERIAL INSTITUTE
10 NOV. 1916
LIBRARY

ISSUED UNDER
THE DIRECTION OF THE
HONORARY MANAGING COMMITTEE
OF THE
TROPICAL DISEASES
BUREAU.

COMMONWEALTH MYCOLOGICAL INSTITUTE
26 MAY 1971

General Editor:
THE DIRECTOR OF THE BUREAU.

London:
TROPICAL DISEASES BUREAU,
Imperial Institute, S.W.

Sold by BAILLIÈRE, TINDALL & COX,
8, Henrietta Street, Covent Garden, W.C.

Price 1/6 net.] *Entered as Second Class Matter in the U.S.A. Post.* [*All Rights Reserved.*

HONORARY MANAGING COMMITTEE.

Chairman:

The Right Honourable Sir J. West Ridgeway, G.C.B., G.C.M.G., K.C.S.I., LL.D.
(who is also Chairman of the Advisory Committee of the Tropical Diseases Research Fund).

Sir John Rose Bradford, K.C.M.G., C.B., F.R.S.
(representing the Royal Society).

Surgeon-General Sir David Bruce, C.B., F.R.S.
Surgeon-General Sir R. Havelock Charles, I.M.S., G.C.V.O.
Colonel Sir William B. Leishman, C.B., F.R.S., K.H.P.
Sir John M'Fadyean, M.R.C.V.S.
Sir Patrick Manson, G.C.M.G., F.R.S.
Sir S. Stockman, M.R.C.V.S.

Mr. E. C. Blech, C.M.G.
(representing the Foreign Office and Sudan Government).

Mr. H. J. Read, C.B., C.M.G.
(representing the Colonial Office),
with

of the Colonial Office, as Secretary.

STAFF OF THE BUREAU.

Director:
A. G. Bagshawe, C.M.G., M.B., D.P.H. Cantab.,
of the Uganda Medical Staff.

Assistant Director:

Librarian and Secretary:
R. L. Sheppard.

Sectional Editors:
P. S. Abraham, M.D., B.Sc.
Andrew Balfour, C.M.G., M.D., D.P.H. Cantab.
Fleet-Surgeon P. W. Bassett-Smith, R.N., C.B., M.R.C.P.
R. T. St. John Brooks, M.D., D.T.M. & H.
H. B. Fantham, M.A., D.Sc.
Edward Hindle, Ph.D.
Colonel W. G. King, C.I.E., I.M.S. (retd.).
J. C. G. Ledingham, M.B. Ch.B., D.Sc.
R. T. Leiper, D.Sc., M.B., Ch.B.
J. B. Nias, M.D., M.R.C.P.
W. J. Penfold, M.D., D.P.H.
F. M. Sandwith, C.M.G., M.D., F.R.C.P.
H. Schütze, M.D.
Lt.-Col. J. H. Tull Walsh, I.M.S. (retd.).
C. M. Wenyon, M.B., B.S., B.Sc.
Warrington Yorke, M.D.

Editor of the Tropical Veterinary Bulletin:
Captain J. T. Edwards, B.Sc., M.R.C.V.S.

Now Ready. Large Royal Octavo.
Pp. xii. + 261.
With 3 Coloured Maps, 5 Coloured and 68 other Plates.
Price 7s. 6d. n t.

SLEEPING SICKNESS:

BEING A RECORD OF FOUR YEARS' WAR AGAINST IT IN PRINCIPE, PORTUGUESE WEST AFRICA.

By B. F. BRUTO DA COSTA, J. FIRMINO SANT'ANNA, A. CORREI DOS SANTOS, and M. G. DE ARAUJO ALVARES.

Translated by
Lieut.-Col. J. A. WYLLIE, F.R.G.S.

Published for The Centro Colonial, Lisbon, by Baillière, Tindall & Cox, 8, Henrietta Street, Covent Garden, London.

TRADE MARK

'WELLCOME'

BRAND

Concentrated Diphtheria Antitoxin

The antitoxic globulins separated from Diphtheria Antitoxic Serum

1000 units in 1 c.c. instead of 2·5 c.c.

as in the case of an ordinary serum.

Maximum elimination of useless proteins.

Non-viscous, readily absorbed.

For Prices, see Wellcome's Medical Diary

BURROUGHS WELLCOME & CO., LONDON

BAILLIÈRE, TINDALL & COX,

PUBLISHERS
AND BOOKSELLERS
OF ALL

MEDICAL WORKS.

LIBRARIES IN ANY PART OF THE WORLD SUPPLIED.

SUBSCRIPTIONS TAKEN FOR ANY PERIODICAL.

All Recent Publications Stocked and Orders Despatched by Return Mail.

BAILLIÈRE, TINDALL & COX,

8, Henrietta Street, Covent Garden, London.

Journal of Economic Entomology.

OFFICIAL ORGAN OF THE

American Association of Economic Entomologists.

EDITORIAL STAFF.

EDITOR: E. PORTER FELT, State Entomologist, New York.
ASSOCIATE EDITOR: W. E. BRITTON, State Entomologist, Connecticut.
BUSINESS MANAGER: A. F. BURGESS, In charge of Moth work U.S. Bureau of Entomology, Massachusetts.

ADVISORY COMMITTEE.

W. E. HINDS, State Entomologist, Alabama.

L. O. HOWARD, Chief Bureau of Entomology, United States Department of Agriculture.

F. M. WEBSTER, Bureau of Entomology, United States Department of Agriculture.

H. T. FERNALD, Professor of Entomology, Massachusetts Agricultural College.

HERBERT OSBORN, Professor of Zoology and Entomology, Ohio State University.

PERCIVAL J. PARROTT, Entomologist, New York Agricultural Experiment Station.

Published bi-monthly, containing papers and articles by leading Economic Entomologists. Also prints the proceedings of the above Association together with the reports of the official meetings of its sections on Horticultural Inspection and Apiary Inspection.

This Journal is invaluable to workers in entomology

Subscription price in the United States and its possessions, Dominion of Canada and Mexico, $2.50. per year. To all other countries, $3.00.

For further particulars and sample copy, address—

Mr. A. F. BURGESS, Melrose Highlands, Mass., U.S.A.

THIRD EDITION.

Royal Octavo. Pp. x—351, with 12 Coloured Plates and 20 Figures.
PRICE **14s.** NET (Postage 7d.).

INFECTION
AND
IMMUNITY

A TEXT-BOOK OF IMMUNOLOGY AND SEROLOGY.

By CHARLES E. SIMON, M.D.,

Professor of Clinical Pathology and Experimental Medicine, College of Physicians and Surgeons, Baltimore.

The "Lancet" says:

"In the case of Professor Simon's book we have presented to us an unusually good account of the very difficult matter with which it deals. The earlier discovered basal facts of immunity are, indeed, now so well established as to form an essential part of every student's mental equipment, but investigation progresses so rapidly that it is difficult even for those closely interested in pathology to keep themselves 'au courant' with the latest discoveries and the hypotheses proposed to explain them, so that a book such as this is thrice welcomed. . . . The information given is full, clear, and well up to date. Illustrations are supplied where they are necessary. There is also an adequate index."

LONDON:
BAILLIÈRE, TINDALL AND COX,
8, HENRIETTA STREET, COVENT GARDEN.

TROPICAL DISEASES BUREAU.

TROPICAL DISEASES BULLETIN.

Vol. 8.] 1916. [No. 6.

PELLAGRA.

LAVINDER (C. H.). **History of Pellagra.—Certain Salient Points.—** *Southern Med. Jl.* 1916. Apr. Vol. 9. No. 4. pp. 324–325.

A short account of the history of pellagra. The earliest observations on this disease were made in Spain by Gaspar CASAL who gave a good description of its general symptomatology. He attributed the malady to atmospheric conditions and poor food. The author draws attention to the interesting fact that throughout all the literature of pellagra, both early and late, there runs the idea that the disease is in some way dependent on a poor diet. This point of view has been substantiated by recent work, and though the exact part played by diet is still unknown, yet the etiology of the disease is most likely to be cleared up by experiments conducted from the dietetic standpoint.

H. Maclean.

SILER (J. F.), GARRISON (P. E.) & MACNEAL (W. J.). **Introduction to the Third Report of the Robert M. Thompson Pellagra Commission of the New York Post-Graduate Medical School and Hospital.** —*Arch. Intern. Med.* 1916. July. Vol. 18. No. 1. pp. 1–3.

A short account of the constitution, investigations and results of the Pellagra Commission of the New York Post-Graduate Medical School, since it began its studies of pellagra in 1912. This Commission has come to the conclusion that pellagra is an infectious disease, and claims that their earlier work has been confirmed by subsequent investigations; they reject with scorn " the ancient theory of dietary deficiency again exploited by Sandwith and others in the recent literature " and state that it is their purpose to present in this third report those portions of their recorded observations " which seem to have the most important bearing on the unsettled problems of pellagra." This report contains the two following papers contributed by Dr. DEVONPORT and Dr. MUNCEY. A list of references to the publications of the Commission is appended.

[Though the etiology of pellagra is still unknown, " the ancient theory of dietary deficiency " or, at any rate, the fact that ill-assorted diet plays the chief part in the etiology of the disease, is gradually

(C307) Wt.3137/63. 1,850. 10.16. B.& F.Ltd. Gp.11/4.

gaining acceptance. It is not clear why the authors refer to one of the very latest theories—the deficiency theory as advanced by Dr. SANDWITH and others—as an "ancient theory." It is only within the last few years that we have really recognized "deficiency diseases"].

H. M.

DAVENPORT (C. B.). **The Hereditary Factor in Pellagra.**—*Arch. Intern. Med.* 1916. July. Vol. 18. No. 1. pp. 4–31. With 38 figs.

MUNCEY (Elizabeth B.). **A Study of the Heredity of Pellagra in Spartanburg County, South Carolina.**—*Ibid.* pp. 32–75. With 28 figs.

Two papers forming a part of the third report of the Robert M. Thompson Pellagra Commission of the New York Post-Graduate Medical School and Hospital. In the first paper the author discusses the question of heredity as a factor in pellagra; he treats the problem from various points of view and, on the evidence available, comes to the conclusion that the term pellagra is applied to various "inflammations and ulcerations of the musculovascular layer of the skin and intestine, doubtless due to the presence of a toxic agent which also induces in predisposed persons nervous and mental disturbances. The differences in the degree of expression of these symptoms are due, among other things, to differences in the hereditary constitution of the affected individuals, and variation in the symptom complex is due to variations in the constitutional, or hereditary, susceptibility or resistance of the different organs affected by the toxin."

The fact that a high incidence of pellagra obtains among blood relatives may be due to infection through close personal contact, or it may be the result of constitutional similarity. The author believes that the evidence suggests that both factors play a part. He contributes a good deal of evidence in favour of the view that the disease is communicable, and is a strong advocate of its infective nature. The majority of the observations in the paper seem to be based on statistics furnished by Dr. Muncey and referred to in the second paper. The conclusions arrived at are as follows:—

"Pellagra is not an inheritable disease in the sense in which brown eye colour is inheritable. The course of the disease does depend, however, on certain constitutional, inheritable traits of the affected individual.

"Pellagra is probably communicable, but how the communicated 'germ of the disease' shall progress in the body depends, in part, upon constitutional factors.

"When both parents are susceptible to the disease, at least 40 per cent., probably not far from 50 per cent., of their children are susceptible; an enormous rate of incidence in a disease that affects less than 1 per cent. of the population on the average. While the high incidence is doubtless due to infection, it is also doubtless due to susceptibility, for right among the affected children grow up brothers and sisters who have never shown the symptoms of pellagra. We can understand this on the ground of inheritable differences in constitution of the children, just as brown eyes and blue eyes occur in the same family.

"The importance of the constitutional factors is evinced by the difference in the reactions to the toxin of the disease shown by different families. Many families never show mental symptoms, while others usually do. In some families the intestinal symptoms are slight or negligible; in others severe and associated with early death. In some families the skin

eruptions amount to little; other families are characterized by severe ulceration and desquamation of the derma. These family differences have all the characteristics of biotypes or blood lines, and afford the best proof that there is, indeed, a hereditary factor in pellagra."

In the second paper, which deals with the same problems, it is stated that the field of research was limited to Spartanburg County, South Carolina. The author admits that several of the conditions more or less essential for a successful study of heredity in any disease were absent in the locality chosen for the investigation, but presents the carefully sifted data of eight months labour with the hope that it may help to establish a foundation for future study. The conclusions arrived at are summarised as follows :—

"An analysis of the data collected shows no evidence of direct heredity. There may, however, be an hereditary predisposition to the disease in those families in which chronic gastro-intestinal symptoms have existed for several generations. The relatively high proportion of gastric and intestinal diseases among pellagrous families would seem to substantiate this hypothesis. Of the 105 families in which there is only one case of pellagra, only three give history of intestinal or skin diseases in the ancestors, and only one gives history of antecedent insanity. With this predisposition to the disease, direct contact or life in endemic sections might be the exciting factor necessary for its development."

At the end of the papers a number of charts and abstracts of family histories are given, which serve to show the manner of studying family groups.

H. M.

Siler (J. F.), Garrison (P. E.) & MacNeal (W. J.). **The Incidence of Pellagra in Spartanburg County, S.C., and the Relation of the Initial Attack to Race, Sex and Age.**—*Arch. Intern. Med.* 1916. Aug. Vol. 18. No. 2. pp. 173–211.

An extensive investigation of the points indicated in the title. The scope of the work and the results obtained are best given in the authors' own summary, which is as follows :—

"1. The number of recognized incident cases of pellagra in Spartanburg County has increased progressively each year since 1907, very rapidly to 1911 and at a less rapid rate to 1914.

"2. The death rate in year of initial attack was 15·8 per cent. for the total 1,180 recorded cases. There is no definite indication of a progressive change in the death rate in recent years, although it was apparently higher previous to 1911.

"3. The disease has attacked the white race more than the negroes in this county, but in recent years there has been a slow but progressive increase in the ratio of incident negro pellagrins to incident white pellagrins.

"4. The death rate in initial attack has been 41·8 per cent. for negroes and 12 per cent. for the white race.

"5. Pellagra was very rarely observed under the age of one year. It was not so rare in the second year and fairly common in the age period from 2 to 12 years. The death rate in initial attack has been low in children.

"6. Evidence of residence very close to an antecedent pellagrin has usually been quite clear in the cases of infantile pellagra.

"7. The milk of pellagrous mothers cannot be regarded as the cause or the vehicle of the cause of pellagra in infants.

"8. The age period 12 to 16 years is relatively free from initial attacks of pellagra.

"9. After age 16 years pellagra incidence rises rapidly in women and the rise is especially sharp in coloured women. In the latter group the death rate has been high, 46·7 per cent., in year of onset in the age period 16 to 20 years.

"10. From age 20 to age 50 years, the number of women attacked by pellagra gradually diminishes and the number of men attacked gradually increases, so that the two sexes are approximately equal in this respect at age 50. In old age the onset of pellagra has been slightly more common in men in this population.

"11. The death rate in first attack in white women over 20 years of age has been 11·9 per cent., increasing progressively from 4·6 per cent. in the third decade to 47·6 per cent. in the seventh decade of life. The death rate for analogous groups of white men, coloured women and coloured men has been 21·2 per cent., 40·2 per cent. and 50 per cent., respectively, with a slight tendency for the death rate to increase with age in all groups.

"12. Pellagrins with onset under the age of 12 years were only 3·7 per cent. of the total recorded cases previous to 1910, but the proportion has increased to 29·7 per cent. of the total recorded onsets in the year 1914. These observations corroborate the other evidence of a distinct progressive increase of pellagra in this county in recent years.

"13. The incidence per 10,000 population has been 231 for white female population, 103 for white male, 81 for coloured female and 25 for coloured male. In the age period 10 to 14 years the incidence is low in all groups. In white female population it is highest in the age period 30 to 34 years, namely 535 per 10,000; in white male, in the age period 55 to 59, namely 325 per 10,000; in coloured female 241 per 10,000 in age period 30 to 34; in coloured male 133 per 10,000 in age period 60 to 64.

"14. The lower incidence rate and the higher death rate for those attacked have occurred in negroes in conjunction with greater poverty of this race and a diet poorer in quality, quantity and variety. Incidence has been lowest in the sex and age groups of negroes most completely segregated from white pellagrins."

H. M.

JOBLING (James W.) & PETERSEN (William). **The Epidemiology of Pellagra in Nashville, Tennessee.**—*Jl. Infect. Dis.* 1916. May. Vol. 18. No. 5. pp. 501–567. With 23 charts.

The results of a most minute and exhaustive investigation into the epidemiology of pellagra in the city of Nashville. The following conclusions were arrived at:—

"A few cases of pellagra were probably present in Nashville in 1891, but the disease did not become prevalent until 1908. About 65 per cent. of the cases found in the survey developed during 1914 and 1915. Approximately 89 per cent. of the pellagrins developed the disease while residing in houses which were not connected with sewers, and 95 per cent. of these had unscreened vault or surface privies in close proximity to the house. Only 2 per cent. of the houses were screened. The typhoid incidence corresponds with that noted for pellagra.

"More than 78 per cent. of the patients had associated with other patients before they developed the disease. Thus, 33 per cent. of the pellagrins developed the disease in houses which contained other cases, while in most of the remaining instances there were patients in the adjoining houses or within the same block with whom they constantly came in contact.

"The water used was derived from various sources; it can therefore hardly be considered an important factor in the development of the disease.

"White and coloured races appear to be equally susceptible. More white people than coloured people develop the disease in the spring. The reverse holds true for the summer months. The mortality appears to be greater in the negro race. Relatively few cases were found among negro children.

"Individuals from 10 to 20 years of age are less susceptible than at any other period of life. Women 30 to 50 years of age are from three to four times more susceptible than men. Over 50 years and under 10 years,

both sexes are equally susceptible. In the rural district surveyed, more men than women were affected.

"The diet contains an excess of carbohydrates, but 68·8 per cent. of the patients gave histories indicating that they were consuming proteins in considerable excess of 40 gm. a day, an amount which has been shown to be sufficient to sustain life without the development of pellagra."

H. M.

PERDUE (E. M.). **La pellagra negli Stati Uniti.** [Pellagra in the United States.]—*Ann. d'Igiene.* 1916. May 31. Vol. 26. No. 5. pp. 310–316. With 3 plates.

The author, who is Professor of Tropical Medicine in the Eclectic Medical University, Kansas City, Missouri, is an adherent of ALESSANDRINI and SCALA'S theory that the cause of pellagra is a chronic acid intoxication due to the absorption of colloidal silica in the drinking water. In this paper the geographical distribution of pellagra in the United States is fully described and the geological origin of the drinking water in the different districts of the States analysed.

In the pellagrous districts are found rocks which have a high content of silica and alumina and are poor in alkali. The author's conclusion is that the rivers of districts in which pellagra is unknown are characterised by a hard drinking water—thus in Iowa, Michigan, Ohio, Minnesota, Nebraska and Indiana, which are immune from pellagra, the calcium content of the water is from 40 to 70 parts per million, while in Tennessee and Kentucky, which may be considered as partially pellagrous districts, the calcium content varies from 19 to 28 parts per million; in the pellagrous zone (including Alabama, North Carolina, Georgia, Virginia, Mississippi and South Carolina) the calcium number falls to as low as from 4 to 14 parts. The statement is made that the treatment of the disease with trisodium citrate has given good results. The geographical distribution of pellagra, the death-rate from the disease and the physical geography of the districts are illustrated by a series of plates.

H. M.

PARRISH (E. Mack). **Epidemiology of Pellagra.**—*Texas State Jl. Med.* 1916. Aug. Vol. 12. No. 4. pp. 177–179. With 1 chart.

The author refers to two epidemiological features of pellagra, (1) that the disease is essentially rural and (2) that it is associated with poverty, and enquires what difference there is between the element of poverty in city slums and in country districts. To this question he replies that one important difference is that of *soil infections.* Hookworm disease and pellagra are commonly associated, and the cause of the hookworm infection is acknowledged to be the soil; the analogy in the prevalence and spread of pellagra to that of hookworm disease suggests the idea that pellagra is also a soil disease which originates and spreads in the same way.

[This paper, which was read to a medical society, was followed by a discussion in which various theories as to the etiology of pellagra were advanced; it is perhaps worth noting that the diet theory was rejected by all the speakers.]

H. M.

BEALL (K. H.). **Pellagra.**—*Texas State Jl. Med.* 1916. Aug. Vol. 12. No. 4. pp. 170–173. With 1 chart.

A general description of the prevalence of pellagra in the United States. The disease made its appearance in America about 1907 and rapidly progressed, so that in 1908 considerable numbers of cases were reported. At the present time the author estimates that there are at least 150,000 pellagrins in the United States alone. As usually occurs when a disease invades a virgin country, the type was for years more virulent and fulminating than in Europe, but even now its virulence is being modified and acute cases are becoming rarer. While in Europe the malady is practically rural, the American disease differs in that one third of the cases occur in towns and cities. In Europe the disease is almost exclusively limited to the poorer classes, while in America, on the other hand, people in all walks of life have been attacked and only one half of the total cases occurs among the poor. GOLDBERGER'S theory that the disease is dependent on deficient diet is discussed sympathetically but with a good deal of scepticism, the author concluding that the cause of pellagra is not yet known.

H. M.

WINFIELD (James Macfarlane). **Pellagra. A Clinical Report on the State of New York.**—*New York Med. Jl.* 1916. June 3. Vol. 102. No. 23. Whole No. 1957. pp. 1076–1078.

From the limited number of reported cases, it might be supposed that pellagra is rare in New York State and the immediate vicinity. The author, however, thinks that the number of pellagrins in this part is greater than the reports of the physicians indicate, and explains this anomaly on the ground that the disease presents such varied clinical symptoms that it sometimes goes unrecognised. In support of this view he furnishes particulars of eight indigenous cases of pellagra which came under his notice in various parts of the State since 1911. As far as could be ascertained, none of these patients indulged to any great extent in meat. One lived for years on beans, oleo-margarine and tea-biscuits.

H. M.

BALP (S.). **Uso del mais guasto e probabile assenza di pellagra nel Brasile.** [The Use of Spoilt Maize and the Probable Absence of Pellagra in Brazil.]—*Riv. Pellagrolog. Ital.* 1916. Jan. Vol. 16. No. 1. pp. 4–8.

The author refers to Professor PERACCINI'S publications on the use of spoilt maize in Brazil, where there is an almost entire absence of pellagra. The opinion is expressed that while it is not possible to contract pellagra without maize feeding, the consumption of maize is not necessarily followed by pellagra; the author believes, however, that maize creates a kind of predisposition to the disease and that spoilt maize is poisonous to an organism already prepared by a previous maize diet.

From the results of an enquiry made by Dr. Buscaglia amongst various medical men in Brazil the author concludes that :—

(1) Pellagra is rare in the States of S. Paolo, Guatapara, Santa Veridiana and Martinho Pradho.

(2) Maize does not form the staple diet in these states but the diet is a mixed one and includes animal flesh, eggs, milk, other cereals and vegetables.

(3) Alcohol is much used but it is made from cane sugar and not from maize.

(4) The use of spoiled maize is not excluded but is exceptional. The author refers to a suggestion made by Professor Peraccini that the absence of certain moulds (*Penicillium glaucum*, *Aspergillus fumigatus*, *Aspergillus fluorescens*) may explain the freedom of Brazil from pellagra, notwithstanding the consumption of spoilt maize.

H. M.

Antonini (G.). **Istruzioni e consigli per la lotta contro la Pellagra.** [An Account of the Measures taken in the Struggle against Pellagra.]—*Riv. Pellagrolog. Ital.* 1915. Nov. Vol. 15. No. 6. pp. 92–93; 1916. Jan. Vol. 16. No. 1. pp. 12–14; Mar. No. 2. pp. 26–28; May. No. 3. pp. 39–41.

The author gives a general historical review of the various theories which have been advanced with regard to the etiology of pellagra. He divides these into classes : those in which maize plays some part and those from which maize is entirely excluded.

The author's own opinion is that the relation between maize-feeding and pellagra has been completely established. In 1900, an enquiry was made by him into the condition of the maize consumed in the 20 different provinces in which pellagra was most abundant. In 13 of these he found that spoilt foreign maize was eaten, and in all of them the conditions of milling were very bad and highly favourable for the development of moulds in the grain and flour.

These results are urged in support of Lombroso's theory of intoxication. The success of the prophylactic measures carried out in Italy, which were based on the intoxication theory, are brought forward as evidence in favour of the same theory.

In July 1902, a law for the prevention of pellagra was passed which prohibited the sale of spoiled maize, and amongst other measures provided for the establishment of desiccating places and for the free distribution of salt to pellagrous families.

The number of pellagrins fell from 72,925 in 1899 to 36,329 ten years later ; the mortality diminished and the frequency of insanity among pellagrins was less.

The tests adopted for the recognition of spoiled maize are fully described.

The importance of the improvement of rural hygiene as a prophylactic measure is also discussed.

H. M.

RONDONI (Pietro). **Alcune considerazioni sulla pellagra, la sua eziologia e la sua prevenzione e cura.** [Some Considerations on the Etiology, Prevention and Cure of Pellagra.]—*Riv. Pellagrolog. Ital.* 1916. Vol. 16. Jan. No. 1. pp. 1–4.

Discussing the etiology of pellagra, the writer states that pellagra is predominant in countries where maize is largely used in the diet. There are, however, cases of pellagra in which maize plays no part, but even these can be traced to defects in diet. The large incidence of pellagra in America is the result of a diet too rich in carbohydrates. The disease nearly always attacks people who eat monotonous diet. It is extremely rare in sucking babies. In its first stages pellagra tends to disappear under the influence of good and varied diet. Maize contains protein with a structure different from animal protein; certain amino-acids are scarce while others are too abundant. The nutritive value of maize is therefore low and in order to furnish the necessary amount of utilisable nitrogen, the grain must be consumed in enormous quantities. This results in fermentation and subsequent indigestion so that maize eaters are often badly nourished and subject to dyspepsia. In guinea-pig experiments maize produces disease, in consequence of which the guinea-pigs die in a few weeks. This is probably due to the lack of vitamines. On the whole the author inclines to SANDWITH's theory of deficiency being the principal etiological factor in pellagra.

H. M.

ALPAGO-NOVELLO (Luigi). **Sulla prima introduzione del grano-turco e la prima comparsa della pellagra nel Veneto, nella Lombardia e specie nel Bellunese.** [On the Introduction of Maize and First Appearance of Pellagra in Venetia, Lombardy, and especially in Belluno.]—*Riv. Pellagrolog. Ital.* 1915. Aug. Vol. 15. No. 4. pp. 55–60; Sept. No. 5. pp. 70-71; Nov. No. 6. pp. 85–92.

The cultivation of maize in Italy is ascribed to the beginning of the 16th century; according to LUSSANA, the first cases of pellagra appeared in Lombardy and in Venetia at the end of the 18th century. This leaves an interval of a century and a half between the introduction of maize and the appearance of pellagra. The present article surveys the evidence as to the date of the latter event and concludes that it is considerably prior to that given by LUSSANA. The evidence as to the kind of grain used in making flour in previous centuries is also considered.

The author argues that if the appearance of pellagra is contingent on the introduction of maize, a considerable period of time must necessarily intervene between the introduction of the grain and the recognition of the disease.

H. M.

CALVERT (J. T.). **A Case of Pellagra.**—*Indian Med. Gaz.* 1916. July. Vol. 51. No. 7. p. 241. With 1 coloured plate.

A description of a case of pellagra occurring in a Hindu in Kishengunge Town, Purneah District, India. An interesting point about the case is the fact that the patient had never eaten maize. An excellent coloured plate of the skin lesions accompanies the article.

H. M.

GOLDBERGER (Joseph). **Pellagra: Causation and a Method of Prevention. A Summary of some of the Recent Studies of the United States Public Health Service.**—*Jl. Amer. Med. Assoc.* 1916. Feb. 12. Vol. 66. No. 7. pp. 471–476.

A discussion of the results of experiments on pellagra already described in the Bulletin.* The author claims to have proved definitely that pellagra is the result of a deficient or ill-assorted diet, and believes that the only treatment for the disease is dietetic. The available data are not sufficient to furnish any definite evidence as to the exact nature of the mechanism involved in causing or curing the disease; the important point is, that pellagra results from a fault in the dietary and can be prevented or cured by including in the diet suitable amounts of leguminous protein substances and fresh animal food.

H. M.

MACNEAL (W. J.). **The Alleged Production of Pellagra by an Unbalanced Diet.**—*Jl. Amer. Med. Assoc.* 1916. Mar. 25. Vol. 66. No. 13. pp. 975–977. With 3 figs.

A letter from Dr. MacNeal to the Editor of the *Journal of the American Medical Association* in which he discusses Dr. GOLDBERGER'S alleged experimental production of pellagra as the result of feeding with an unbalanced diet. Attention is drawn to the fact that the first account of the experiments appeared in a newspaper—the *Jackson Daily News*—but here no definite description of the symptoms from which these alleged pellagrins suffered was furnished. Dr. MacNeal also quotes Dr. GOLDBERGER'S account of the experiments published in the *U.S. Public Health Reports* in which the statement occurs that "the dermatitis was first noted between September 12th and September 24th, 1915, or not later than five months after the beginning of the restricted diet" and asks why Dr. GOLDBERGER made no mention of his discovery to the National Association for the Study of Pellagra which met at Columbia on October 21st and 22nd, 1915. This meeting, which was attended by Dr. GOLDBERGER, took place approximately one month after the appearance of the dermatitis and Dr. MacNeal enquires why the cases were not submitted for diagnosis to several experts present at the meeting. Other points regarding the importance to be attached to certain scrotal lesions observed in these cases are discussed. The general tenor of the letter is to cast doubt on the correctness of the diagnosis of pellagra in these cases. It is asserted that the claim and conclusion of Dr. GOLDBERGER, that pellagra developed in these six convicts, lacks the support of any reliable published evidence and a warning is given that the claim that pellagra has been produced by a restricted diet should be regarded with suspicion until further and more convincing proofs are forthcoming. Appended is a short reply by Dr. GOLDBERGER who prefers to await the publication of his full report before discussing the subject.

H. M.

* See this *Bulletin* Vol. 7, pp. 51, 52 and 309.

WOOD (Edward Jenner). **Vitamin Solution of the Pellagra Problem. A Preliminary Note.**—*Jl. Amer. Med. Assoc.* 1916. May. 6. Vol. 66. No. 19. pp. 1447–1448.

This paper contains an account of some experiments carried out to throw light on the deficiency theory of pellagra. Similarity in the processes of the milling of rice and corn suggested that a vitamin protective against pellagra might be contained in the outer layers of corn, just as a vitamin protective against beriberi is believed to be contained in the outer layers of rice.

Whereas, formerly, in the Southern States, corn was crushed by water power between stones, milling by steam or electric power is now used. In the present method, the grain is heated to loosen the outer husk, and the germ and husks removed. The ground endosperm forms the milled meal, the husks, germs, etc., being sold for cattle-feeding as "corn chops."

Prisoners fed on this milled meal were described by NIGHTINGALE in 1905 as developing a disease, "zeism," the symptoms of which correspond to those now identified as indicating acute pellagra. The substitution of hand-milled corn completely removed the trouble.

Pigeons fed with milled meal developed polyneuritis symptoms (redness of the legs, weakness and loss of feathers); those fed on hand ground meal remained healthy.

In districts where corn is ground by water power at the local mill and the whole meal eaten, pellagra is unknown. Pellagra is only prevalent in corn-eating districts though sporadic cases may occur elsewhere.

H. M.

VEDDER (Edward B.). **Dietary Deficiency as the Etiological Factor in Pellagra.**—*Arch. Intern. Med.* 1916. Aug. Vol. 18. No. 2. pp. 137–172.

A review of the theories as to the etiology of pellagra, with particular reference to the diet deficiency hypothesis. From a consideration of observations published by many different authorities, the author is inclined to favour the ill-balanced diet theory. The question of a possible similarity between pellagra and acknowledged deficiency diseases such as beriberi is discussed and the following conclusions advanced:—

"1. There is a certain similarity between pellagra and other known deficiency diseases, namely, beriberi and scurvy.

"2. Much of the evidence that has been presented as a proof of the infectious nature of pellagra can be reasonably explained in accordance with a deficiency hypothesis.

"3. A deficiency is demonstrable in the diets of most pellagrins. This deficiency appears to me to result from the too exclusive use of wheat flour, in association with cornmeal, salt meats and canned goods, foods that are known to be deficient in vitamins.

"4. Changes in the diet of the people of the South have occurred during the past ten or fifteen years. Since we do not know all the changes that have occurred, and cannot judge accurately the importance of the known changes, it is unscientific to assume that the recent increase in pellagra cannot be due to such changes.

"5. The hypothesis that pellagra is caused by a deficiency is very plausible and must be taken into consideration in subsequent studies of this disease."

H. M.

BOND (H. E.). **The Causation and Treatment of Pellagra.**—*Med. Record.* 1916. May 6. Vol. 89. No. 19. Whole No. 2374. pp. 816–819.

Referring to the cutaneous symptoms of pellagra, the author quotes a number of observations made by different writers to show that an intimate relationship exists between gastro-intestinal lesions and changes in the skin. He suggests that pellagra is due to absorption, from the intestinal tract, of bacterial toxins which act on the sympathetic nervous system in the intestines and on the chromaffin cells and tissue. Owing to the close connection of these structures with the central nervous system the characteristic skin pigmentation with degeneration and neuritis is produced. The condition is intensified by certain actinic rays of the sun, which act as irritants to the exposed skin surfaces. The treatment advocated aims at a thorough disinfection of the gastro-intestinal tract, and for this purpose such drugs as beta-naphthol, calomel and salol are recommended. A well balanced diet must also be employed.

H. M.

van ZANDT (I. L.). **Some Thoughts on Pellagra.**—*Texas State Jl. Med.* 1916. Aug. Vol. 12. No. 4. pp. 175–177.

The purport of this paper is to combat the idea that pellagra is a diet disease. To those inclined to accept the diet deficiency theory the author suggests that explanations of certain seeming inconsistencies should first be obtained. The chief difficulties set out by the author are as follows :—

Why is it that pellagra is limited to the southern part of the United States while there is abundant evidence to show that poverty and poor diet is equally prevalent in the north ?

Why does the disease become less severe in winter ?

Why were there no cases of pellagra for 410 years after the discovery of America, while during the next 13 years there were hundreds of thousands ? Were there no " unbalanced rations " during these 410 years ?

Why has pellagra practically disappeared from France where from 1829 to 1880 it was exceedingly common ?

With regard to GOLDBERGER's experiments [this *Bulletin*, Vol. 7, pp. 51–52] it is pointed out that the modern treatment of tuberculosis consists in the liberal feeding of the patient. Though this method has often a marked effect in curing tuberculosis nobody doubts that the disease is really a bacterial one due to the bacillus tuberculosis, and that the beneficial action of diet is an indirect one. The view is also taken that many people living in districts in which the disease is endemic may have a greater tendency to develop the malady under unfavourable general conditions than others living in pellagra-free districts.

GOLDBERGER's experiments therefore would be of much greater value if the subjects had been taken from a prison in New York or Montreal where pellagra is practically unknown, rather than from the Mississippi Penitentiary where the disease was actually prevailing.

H. M.

BLOSSER (Roy). **The Etiology of Pellagra with Especial Consideration of the Phenomena of Sensitisation to Maize and Sugar-Cane Products.**—*Southern Med. Jl.* 1916. May. Vol. 9. No. 5. pp. 401–404.

The view expressed in this paper is that the etiology of pellagra is closely bound up with certain products of sugar-cane which contain active poisons; when a sufficient quantity of these poisons is consumed pellagra supervenes. Granulated sugar seems to be innocuous in this respect, but sugar-cane syrups of various degrees of purity appear to be exceedingly deleterious. In support of these contentions the author quotes certain experiments on dogs. Dog number 1 was fed for six months on granulated sugar mixed with a variable diet. No harmful effects were produced. Dog number 2 was fed on a similar diet, except that the sugar was substituted by a corresponding amount of sugar-cane syrup, while a third dog was given a "cheap refinery syrup." Dog number 2 did not develop well and was weak and flabby. On autopsy necrotic areas were found in the intestine, while the liver showed a commencing intralobular cirrhosis; the epithelial cells of the kidney tubes were swollen, granular and blurred. Dog number 3 lived only 10 weeks. Soon after the beginning of the experiment, it showed an erythema of the legs and tail, diarrhoea, photophobia and other symptoms. The autopsy revealed a large yellowish grey liver, catarrhal enteritis, duodenal ulcers and nephritis. The comparative modernity of pellagra in America is accounted for by the new methods utilised in sugar refining, whereby large quantities of cheap syrups have been put on the market. It is also claimed that all advanced and chronic cases of pellagra show a certain sensitisation to sugar-cane products, which on ingestion immediately cause a burning sensation of the tongue, oesophagus and stomach accompanied by palpitation and nervousness. A similar sensitisation is seen in the case of maize.

H. M.

AULDE (John). **Pellagra.—A Critical Study.**—*Med. Record.* 1916. July 29. Vol. 90. No. 5. Whole No. 2386. pp. 181–185.

A study of the constitution of certain diets and their effect in producing pellagra leaves no doubt in the author's mind that the essential fact in the production of pellagra and "all chronic diseases" is mineral deficiency in the protein molecule of the body. It appears that the particular diet most liable to set up pellagra is one in which the amount of magnesium present exceeds the calcium content. This gradually results in a calcium depletion in the body cell with a coincident substitution of magnesium. This "calcium depletion is responsible for pellagra."

H. M.

FAIRBANKS (Geo. D.). **Some Views on Oxidase Activity in Pellagra.**—*Texas State Jl. Med.* 1916. Aug. Vol. 12. No. 4. pp. 173–175.

The author's view of pellagra is that the characteristic symptoms are produced as the result of an acidosis. This acidosis is chiefly due to the presence in the body of phosphoric acid and purins set free in the

circulation by the catabolism of nucleic acid; certain amino- and fatty acids also play a part in this condition. The food eaten by those who contract pellagra is largely composed of substances which furnish excess of nucleic acid, purins and amino-acids, while on the other hand, the necessary amounts of neutralising bodies such as sodium and calcium are lacking. In consequence of this deficiency acidosis ensues, which in turn depresses the oxidase activity of the body tissues. Thus an accumulation of toxins is produced which give rise to the characteristic symptoms of pellagra.

H. M.

MODINOS (P.). **Une nouvelle théorie sur l'étiologie de la pellagre et son traitement.**—*Bull. et Mém. Soc. Méd. des Hôpit. de Paris.* 1916. Apr. 3. Ser. 3. Vol. 32. No. 11–12. pp. 440–443.

From clinical observations the author advances a theory as to the etiology of pellagra. He believes that the malady is due to endocrinic insufficiency, which, acting through the sympathetic, gives rise to the manifestations of pellagra.

Skin lesions analagous to those of pellagra are characteristic of certain diseases caused by insufficiency of the internal secretions of the endocrinic glands, e.g., in Raynaud's disease and in acromegaly. The intestinal troubles of pellagra may also be explained by disturbance of the sympathetic system. The mental phenomena are analogous to the psychoses found in Basedow's disease, in Addison's disease and in myxoedema.

In Egypt the author met with three cases of pellagra which he treated by means of suprarenal extract, in two cases with marked success. In the third case, which was very severe, the cutaneous and mental symptoms showed marked improvement, but the diarrhoea persisted and death ensued. An autopsy showed a large liver abscess to which death was due. The suprarenals were much enlarged, violet in colour, and abnormally hard to the touch. The author considers that the results obtained by treatment support the theory advanced.

H. M.

YARBROUGH (John Fletcher). **Pellagra.**—*Southern Med. Jl.* 1916. Apr. Vol. 9. No. 4. pp. 325–327.

A paper dealing with the treatment and causation of pellagra.

The view is taken that "pellagra is simply an auto-intoxication, the result of a carbohydrate diet, in which there is practically no protein. This carbohydrate or alcoholic material, when taken into the stomach, is quickly converted by the normal heat of the body into what the distillers call 'sour mash.' The production of this sour mash three times daily for weeks and months finally so cripples metabolic activity as to allow this fermented material to be taken into the circulation without the necessary chemical change; the victim's metabolic function has been practically destroyed by eating alcohol, and the result is the varied and complex symptoms we call pellagra."

On this basis of the etiology of pellagra, the treatment adopted naturally aims at restriction of carbohydrates and a gradual substitution of protein food. Medicinal treatment, however, is said to be of much value in accelerating a cure, and much stress is laid on the efficacy of dilute nitric acid given in doses of 20 to 30 drops as nearly as possible

on an empty stomach*. Clinical accounts of several severe cases of pellagra are furnished in which most satisfactory results were obtained.

H. M.

SWANSON (Cosby). **The Differential Diagnosis of the Skin Manifestations in Pellagra from other Dermatoses.**—*Southern Med. Jl.* 1916. Feb. Vol. 9. No. 2. pp. 117–123.

A useful paper giving a detailed account of the skin lesions found in pellagra and their diagnosis from other dermatoses. The chief diseases having skin eruptions resembling pellagra are "acrodynia, erythema solare, erythema caloricum, erythema ab igne, erythema pernio, erythema multiforme, eczema, especially the erythematous form, trade dermatitis, dermatitis venenata, "recurrent summer eruptions," lupus erythematous, syphilis, xerodermia, erysipeloid, "erysipelas faciei perstans."

In acrodynia the rash differs from pellagra in that it runs a shorter course and rarely ever recurs. The eruption in erythema solare is generally less acutely inflamed and less red than is the case in pellagra; while pellagra becomes darker, this gradually fades and there is less exfoliation of the epidermis and very little pigmentation. The diagnosis of pellagra from all the other diseases mentioned above is carefully considered.

[This paper, though very valuable, does not lend itself to condensation, as it consists of minute directions for differential diagnosis.]

H. M.

RIGHETTI (R.). **I pazzi pellagrosi nel manicomio prov. di Ascoli Piceno durante il sessenio 1909–1914.** [Pellagrins suffering from Insanity in the Asylum in the Department of Ascoli Piceno, during the Period 1909–1914.]—*Riv. Pellagrolog. Ital.* 1916. May. Vol. 16. No. 3. pp. 36–38; July. No. 4. pp. 56–58.

The author was appointed Director of the asylum at Fermo in 1909. The statistics of the patients admitted suffering from pellagra psychoses showed such a great diminution after his appointment that he was driven to investigate the accuracy of the diagnoses of his predecessor.

Of 106 cases classified by his predecessor as pellagrous mania and admitted to the asylum between 1901 and 1910, 23 were still in the asylum and therefore could be submitted to investigation.

He classifies these as follows:—

Diagnosis.	Men.	Women.	Total.
Dementia praecox	6	2	8
Depressive maniacal psychosis	5	5	10
Imbecility	—	1	1
Epileptic dementia	—	1	1
Senile dementia	—	1	1
Doubtful or complex diagnoses	1	1	2
	12	11	23

* This with dietetic treatment was advised by Dr. W. E. DEEKS in 1913 in a paper on Pellagra in the Canal Zone [see this *Bulletin* Vol. 2. p. 491.]

He adopts the distinction of FINZI between mental disturbances in pellagrins and the specific psychoses of pellagra. Out of the 23 cases, he considers that only 5 are to be considered as probable cases of the specific psychosis of pellagra, 11 as doubtful, whilst 7 are altogether excluded.

The mental condition of 20 pellagrins coming under his observation in 1909–1914 is analysed ; only one showed the true pellagra psychosis ; the classification of these cases is as follows :—

Diagnosis.	Men.	Women.	Total.
Psychosis of Pellagra	–	1	1
Depressive maniacal psychosis	5	5	10
Dementia praecox	–	3	3
Presenile psychosis (Kraepelin)	–	1	1
Arteriosclerotic psychosis ..	1	–	1
Senile dementia	1	1	2
Arrested development	1	1	2
	7	13	20

H. M.

SANDY (Wm. C.). **Psychoses associated with Pellagra.**—*Southern Med. Jl.* 1916. June. Vol. 9. No. 6. pp. 495–498.

A description of the clinical types of psychoses associated with pellagra as seen in the State Hospital for the Insane, Columbia, during the last few months. The exact type of psychosis encountered in pellagrins is probably as much dependent on the natural disposition of the patient as on the etiological factor, so that the mental symptoms vary according to the type of individual affected. The "infective exhaustive psychosis" was present in 28 per cent. of cases and appears to represent the most common type of mental disturbance. In 16 per cent. of cases the "straight manic depressive group" was represented, while in 14 per cent. dementia praecox was the mental diagnosis. In several instances, the ordinary symptoms of general paralysis of the insane appeared, while in others the symptoms were those of senile dementia. In a certain number of cases a satisfactory diagnosis of the mental condition was impossible.

H. M.

O'MALLEY (Mary). **The Report of Twelve Cases of Pellagra and its Relation to Mental Disease.**—*Interstate Med. Jl.* 1916. July. Vol. 23. No. 7. pp. 513–528.

A paper containing short concise histories of twelve cases of pellagra occurring in the Guest Hospital for the Insane, Washington, D.C. The mental aspect of pellagra is discussed in the light of the mental disturbances found in the above cases. The author comes to the conclusion that "pellagra may be associated with various psychoses, without having any specific relation to them, or it may be the causative factor in producing a toxic psychosis."

H. M.

LORENZ (W. F.). **Note cliniche di pellagrosi riceventi diete eccessive.** [Clinical Notes on the Use of Abundant Diet in the Treatment of Pellagrins.]—*Riv. Pellagrolog. Ital.* 1916. July. Vol. 16. No 4. pp. 50–51.

The effect of an abundant diet consisting of milk, cereals, eggs, fresh meat, vegetables, etc., used in the treatment of 27 cases of pellagra may be summarised as follows: seven died, three showed no change, thirteen improved and four were cured. Of the 13 cases which showed improvement, in six the mental disturbances were cured and in seven they showed improvement. In the seven fatal cases grave complications were present.

The treatment used consisted of rest and abundant diet; in six cases Bismuth sub-nitrate was given and in other cases castor oil and enemas of soapy water were administered. Antiseptic baths were used for stomatitis and the cutaneous lesions washed with magnesium sulphate.

H. M.

RIDLON (J. R.). **Pellagra. The Value of the Dietary Treatment of the Disease.**—*U.S. Public Health Rep.* 1916. July 28. Vol. 31. No. 30. pp. 1979–1999.

An investigation carried out to ascertain the effects of dietetic treatment on pellagra. Fifty-one cases of pellagra were treated dietetically, some of these receiving medical treatment as well, while to others no drugs were administered. As far as could be ascertained, it appeared that the use of drugs had no influence, for the patients on diet alone improved quite as rapidly as those receiving medication. Patients with slight nervous symptoms showed more ready response to treatment than others. When the predominating symptoms were referred to the skin and alimentary tract, improvement was evident in a week or ten days. The general results obtained lead to the conclusion that dietetic treatment is of paramount importance in pellagra, and that success follows the use of a diet in which the animal and leguminous protein is increased and the non-leguminous vegetable component relatively decreased.

H. M.

BOOTH (B. H.). **Observations on Forty-six Consecutive Cases of Pellagra treated with Cacodylate of Sodium.**—*Southern Med. Jl.* 1916. Feb. Vol. 9. No. 2. pp. 124–125.

In the treatment of forty-six consecutive cases of pellagra with cacodylate of sodium the author has had only one death; all the other cases have done well. The author thinks that pellagra is due to some organism, and that the cacodylate of sodium either acts directly on this organism, or else helps to promote nutrition and so indirectly cures the disease.

H. M.

SECCHIERI (Arturo). **La cura della pellagra con le iniezione di citrato trisodico.** [Cure of Pellagra by Injections of Trisodium Citratè.] —*Policlinico.* Sez. Pratica. 1916. Apr. 23. Vol. 23. No. 17. pp. 532–534.

The author supports the theory of ALESSANDRINI and SCALA that pellagra is due to an acid intoxication caused by drinking water containing colloidal silica and from which certain electrolytes are absent. He describes the treatment of four cases in which good results were obtained by injections of tri-sodium citrate ; control cases which did not receive these injections showed no similar improvement.

H. M.

COLE (W. F.). **Accidental Discovery of a Possible Cure for Pellagra.** —*Southern Med. Jl.* 1916. May. Vol. 9. No. 5. pp. 404–406.

The author believes that pellagra is caused by a germ which " is most likely a protozoa " and that the best treatment for the disease is to be found in the administration of calomel, santonin and castor oil. His faith in these remedies is based on the statement of a woman whose three children were suffering from roundworms and pellagra. She gave them vermifuge for the worms and was surprised to find that not only the worms, but also the pellagra, disappeared. This information she communicated to the author of the present paper, who drew the above conclusions from the data furnished.

H. M.

HUNTER (Andrew), GIVENS (Maurice H.) & LEWIS (Robert C.). **Preliminary Observations of Metabolism in Pellagra.**—*Treasury Dept. U.S. Public Health Service. Hygienic Laboratory Bulletin.* 1916. Feb. No. 102. pp. 39–68.

These experiments were carried out on inmates of the pellagra hospital of the U.S. Public Health Service at Spartanburg, S.C. For the most part they follow the lines suggested by various predecessors in the field of metabolism in pellagra, and are mostly confirmatory in character. Each patient received a carefully defined ration, so that the effect of diet could with some certainty be ascertained. Gastric analyses, indican determinations and nitrogen balances form the chief objects of the present investigation.

Gastric Analyses.—The Ewald test breakfast was given and the gastric contents obtained after one hour. Of 29 individuals examined,

" 15, or 52 per cent., showed an entire absence of free HCl in the gastric contents ; in 3 (10 per cent.) the free acidity was decidedly subnormal ; while in 11 (38 per cent.) it was up to or beyond what is generally regarded as the normal limit. . . . Available data would make it appear that in about three-fourths of all cases the free acid of the gastric contents may be expected to be subnormal, and in about half entirely absent."

When the acidity of the gastric contents was normal, pepsin was present in reasonable amounts. Only three exceptions to this rule were met in the series. A deficiency or absence of acid on the other hand was nearly always accompanied by a lack of pepsin. Some evidence was obtained that the absence of pepsin did not indicate that the secretory cells had lost the power to form pepsin, but rather that

the enzyme was destroyed as soon as it appeared in the stomach. The presence of trypsin in the gastric contents was observed in a few cases. The condition of gastric anacidity appears to be very resistant to treatment, for in spite of appropriate therapeutic measures no indication whatever of the return of HCl to the secretion was obtained in any case.

Indican Determinations.—Out of 23 cases examined, no less than eight showed a complete or almost complete absence of indican, while in the others a varying amount was found. The indicanuria was greatest among cases with a deficiency of hydrochloric acid in the gastric juice. The authors conclude that "the existence of pellagra is compatible with any degree whatever of indican production, even with none at all, and that indicanuria, undeniably a common feature of the disease, is by no means an essential one," and makes the following generalisations:—

"(1) The pellagrin whose gastric HCl has not suffered diminution will excrete on a vegetable diet either no indican at all, or at most a moderate amount; but if he is on a meat diet his indican output may be excessive.

"(2) The pellagrin with diminished gastric acidity will always show an excessive indican output when his diet is animal; on a vegetable diet indican may be absent, moderate, or high."

Nitrogen Balances.—Investigations bearing on the nitrogen balance were carried out on seven patients. The results are furnished in tabular form.

H. M.

RIDLON (J. R.). **Pellagra. Laboratory Examinations in Connection with the Disease.**—*U.S. Public Health Rep.* 1916. May 19. Vol. 31. No. 20. pp. 1231–1242.

A description of the results obtained in the examination of faeces, blood and urine from pellagrins.

Faeces.—Since several observers have stated that intestinal parasites are of common occurrence in pellagra, the faeces of 95 patients were examined. The material was obtained in as fresh a condition as possible, and in the majority of cases was examined within six hours after passage. A small portion of the faeces was emulsified in a large drop of warm salt solution and examined with an oil-immersion objective; dark field illumination was also employed in some cases. The results are given in the table.

Table.

Total number of patients examined	95
Total number of patients infected	56
Patients infected with	
(1) Trichomonas	41
(2) *Endamoeba coli*	22
(3) *Lamblia intestinalis*	18
(4) *Necator americanus*	10
(5) *Strongyloides stercoralis*	2

Yeasts, fine motile spirochaetes and motile spirilla with from two to five turns were also observed in certain specimens. None of the above mentioned parasites or other organisms were considered to play any part in the etiology of pellagra.

Blood.—Blood examination in 55 cases showed that complement fixation tests as carried out by NOGUCHI's technique were all negative; no evidence was found that a positive Wassermann reaction ever occurs in uncomplicated pellagra. In 28 cases, blood counts, haemoglobin estimations and differential leucocyte counts were carried out, but the figures obtained fail to show "any marked variation from normal beyond a mild degree of secondary anaemia. No constant or characteristic change was noted which would be of material help in the diagnosis of this disease."

Urine.—In a hundred cases examined, the average specific gravity of the urine was 1018·3. A slight amount of protein was present in 9 cases; no sugar reaction was obtained. In 57 urines tested for indican, 96·4 per cent. gave a positive reaction, while only two patients showed a total absence of this substance. The presence of indicanuria in such a large percentage of cases suggests that this symptom may be of value in confirming the diagnosis in difficult cases, provided a sufficient number of tests are made.

H. M.

LORENZ (W. F.). **Il liquido cerebrospinale nella pellagra.** [The Cerebrospinal Fluid in Pellagra.]—*Riv. Pellagrolog. Ital.* 1916. July. Vol. 16. No. 4. pp. 51–52.

One hundred and fifty-three samples of cerebrospinal fluid were examined from 106 cases of pellagra. The examination consisted in a cell count, a determination of the globular constituents and the "colloidal gold chloride" test of WASSERMANN (NOGUCHI) and LANGE. In making the cell count, all the nucleated elements were counted as lymphocytes. Of the 106 cases examined, 96 had less than 5 cells per cubic millimetre; in two cases the number varied from six to nine cells per cmm. Eight cases, in which a lymphyocytosis of from 20 to 60 cells per cubic millimetre was observed, were found to be cases of pellagra complicated by syphilis.

The two reactions used to determine the excess of globulin—the butyric acid reaction of NOGUCHI and that of NONNE-APPELT, modified by ROSS-JONES—gave identical results. Seven cases of uncomplicated pellagra gave positive results and 18 gave "weakly positive" reactions. The excess of globulin in the positive cases was less than 1·8 per cent. With the exception of the eight syphilitic cases and of two others, the Wassermann reaction was negative. The colloidal gold chloride test was also negative except in the eight syphilitic cases.

The determination of the pressure of the fluid was considered to be of little value.

The author concludes that lymphocytosis is not present in uncomplicated cases of pellagra, a result in accordance with recent investigations on the nervous system of pellagrins. The absence of lymphocytosis, or of an increase of the nucleated elements in the fluid, indicates the absence of an infection with inflammatory lesions in the structures bathed by the cerebrospinal fluid.

H. M.

Koch (Mathilde L.) & Voegtlin (Carl). i. **Chemical Changes in the Central Nervous System as a Result of Restricted Vegetable Diet.** —*Treasury Dept. U. S. Public Health Service. Hygienic Lab. Bull.* 1916. Feb. No. 103. pp. 5–49. With 12 charts.

ii. **Chemical Changes in the Central Nervous System in Pellagra.**— *Ibid.* pp. 51–129.

The first paper deals with a series of experiments on monkeys and rats. The object of the investigation was to ascertain what changes occurred in the central nervous system of these animals as the result of feeding on a restricted diet composed of different cereals and vegetables. According to Voegtlin, the etiological factor in pellagra is to be found in a vegetable diet characterised by a high carbohydrate and low protein content, and on this hypothesis it was thought that such a diet might induce in the brain and cord of animals changes similar to those found in pellagra. A ponderous mass of figures and rather involved calculations are furnished and the general conclusions arrived at are summed up as follows :—

"Chemical changes in the brain and cord are observed in animals (monkeys and rats) as the result of an exclusive vegetable diet of various composition.

"Histological examination of the central nervous system of these animals reveals extensive degeneration of many nerve tracts in the spinal cord, very similar to those found in pellagra.

"In some of the animals the chemical changes are practically identical with the changes observed in pellagra. These findings therefore yield additional evidence for the theory that pellagra is a dietary disease."

The second paper deals with a similar laborious investigation into the chemical composition of the brain of five cases of pellagra. The authors claim to have established the following points :—

"Extensive chemical analyses of the central nervous system in five cases of uncomplicated pellagra, as compared with normal controls, revealed the following principal abnormalities :—

"1. A tendency for the water to increase, a loss of lipoids, and a tendency for the proteins slightly to decrease.

"2. A decrease in the cerebrosides, phosphatides, and sulphatides, which is probably due to an increased lipolytic process, associated with the degeneration of the tissue.

"3. A relative increase in the cholesterol content of the cerebellum and spinal cord.

"4. A diminution of the cholesterol in the cerebrum.

"5. The proteins seem to be the least affected of all the constituents. They are present in normal amounts in the cerebrum and cerebellum. In the spinal cord a decided increase is noted in the dry tissue, whereas in the fresh tissue the proteins are decreased.

"6. A considerable increase in extractives, which compensate for the loss of lipoids; the nitrogen containing noncolloidal extractives are especially responsible for this increase in total extractives.

"A tentative explanation dealing with this increase in extractives is advanced. According to this conception, the increase in extractives is due to a loss of the pathological tissue in certain hydrophobic lipoids, as the result of an increased lipolysis. This reduction in lipoids would tend to increase the water content of the tissue, which secondarily would give rise to a retention of substances causing a rise in osmotic pressure.

"7. A loss of neutral sulphur in the cerebrum and spinal cord, and an increase in this constituent in the cerebellum, which may possibly be interpreted as a disturbance of the oxidative power of the colloidal sulphur compounds.

"In a general way *the spinal cord exhibits the most striking chemical changes, a fact which is in perfect agreement with histological observations.* The chemical changes in pellagra, while similar in many respects, differ from those in other diseases affecting the central nervous system.

"The present investigation brings out the fact that the central nervous system in pellagra is subjected to a series of considerable chemical changes involving principally certain lipoids. The study of these changes from a chemical point of view has led to a new method of characterization of this disease, which may permit to correlate them, as has been shown in the preceding investigation, with the changes experimentally produced in the nervous system of animals."

[Much of the second paper is taken up with minute accounts of well-known methods of analysis. It is to be regretted that the results of what may prove a useful investigation are presented in such an extremely involved manner.]

H. M.

VOEGTLIN (Carl). **Bread as a Food. Changes in its Vitamine Content and Nutritive Value with Reference to the Occurrence of Pellagra.** —*U. S. Public Health Rep.* 1916. Apr. 14. Vol. 31. No. 15. pp. 935–943.

A paper based on the results of certain investigations carried out to ascertain the possible part played by bread in the etiology of pellagra. The results refer particularly to conditions prevailing in the United States (Spartanburg County), and though dealing chiefly with pellagra may be considered of interest from the point of view of general nutrition. Bread may be regarded as the staple article of diet of the majority of people living in more or less poor circumstances; it is therefore important that bread should possess the highest nutritive value, and any decrease in this direction would probably result in a lowering of the public health. From the time of the early settlers in America up to 1880, the wheat flour or corn meal employed for bread making was obtained by the simple process of crushing the whole grain between stones; the resulting flour or meal, therefore, contained practically the whole of the grain. Gradually, however, changes in the method of milling took place, and in 1878 the roller mill system was introduced. By means of this process it was possible to separate the various parts of the kernel—the germ, the bran and the endosperm—and since the latter gave a much whiter, finer flour than was produced by the old process, the germ and bran were largely discarded and used as food for animals. The highly milled products, however, are often deficient in certain essential food substances—the vitamines—which are located in the aleurone layer and probably also in the germ of the intact grain. The absence of these vitamines is probably of great importance in the etiology of pellagra.

The author claims that the vitamine content of a food, though incapable of direct investigation by chemical means, may be arrived at by ascertaining the amount of phosphorus present, since the vitamine and phosphorus contents run parallel. The following table gives the result of an experiment which seems to bear out these claims. The experiment was carried out on fowls fed with different diets; the number of days during which the fowl remained healthy when fed on a special food gave some indication of the vitamine content of that particular food.

	Per cent. of P_2O_5 in dry food.	Number of days required for appearance of polyneuritis in fowl fed exclusively on this food.
Wheat bread made from highly milled flour	0·114	20–32 days.
Whole wheat	1·120	No symptoms developed.
Corn grits (highly milled) ..	0·169	23–50 days.
Corn grits (highly milled) ..	0·210	30 days.
Corn meal (highly milled) ..	0·30	35 days.
Corn meal (old-fashioned rock ground)	0·659	Remained well.
Corn meal (rock ground)	0·772	Remained well.
Corn germ	2·816	Remained well.
Corn, whole	0·760	Remained well.

From these results the author suggests that for corn products the minimum P_2O_5 content should not fall below 0·5 per cent., while that for wheat flour should not be lower than 1 per cent. The well-known fact that certain vitamines are easily destroyed by alkali is discussed and experiments are given to prove that the baking-powder (sodium-bicarbonate) now used so largely plays a marked part in the destruction of these labile substances.

H. M.

STILES (C. W.) **Diet and Pellagra. Rabbits and Hares as a Possible Dietary Factor in combating the Disease.**—*U.S. Public Health Rep.* 1916. Mar. 31. Vol. 31. No. 13. pp. 817–818.

The author recognises that diet is a dominating factor in the etiology, treatment and prevention of pellagra, and points out that to improve the diet and provide the necessary meat and other ingredients in many poor districts is a difficult problem. He recommends the breeding of rabbits and hares, a scheme which it is claimed possesses many advantages, since these animals are not expensive to breed, do not take much space and would furnish a suitable meat supply in a very short time.

H. M.

PANIZZI (G.). **Commissione Pellagrologica provinciale di Udine. Lavoro svolto dalla Cattedra ambulante di Agricoltura. Sezione di Latisana. Anno 1915.** [Provincial Pellagrological Commission of Udine. Report of the Work carried out by the Travelling Lecturer in Agriculture. Session at Latisana in 1915.]—*Riv. Pellagrolog. Ital.* 1916. Jan. Vol. 16. No. 1. pp. 9–12.

This report gives an account of the preventive measures used to combat pellagra in the districts of Codroipo, Latisana and Palmanova: special attention was paid to agricultural problems in accordance with the programme laid down by the Pellagrological Commission of Udine. Seeds of certain varieties of potato, cabbage and beans were distributed to farmers for cultivation with good results; free distribution of seed of especially favourable varieties of maize was also made. The question of the method of drying maize received consideration.

H. M.

MALARIA.

PARROT (Louis). **Les variations annuelles du Paludisme en Algérie et le régime des pluies.**—*Malariologia.* 1916. Apr. 30. Ser. 1. Vol. 9. No. 2. pp. 53–56. With 1 diagram.

The author's statistics support the saying of the old colonists of Western Algeria that a rainy year is a feverish year. To be exact, in Algeria the intensity of malarial fever in any year depends mainly upon the rainfall in spring (February to April). A very wet spring following an equally wet winter is determinative of a particularly grave epidemic. A dry winter preceding a wet spring has some alleviating influence upon the pernicious effect of the latter. These generalizations have a practical connexion with the prevention of malaria in Algeria.

A. Alcock.

PARROT (Louis). **Le paludisme des Caravanes.**—*Malariologia.* 1916. June 30. Ser. 1. Vol. 9. No. 3. pp. 73–79. With 2 figs. & a map.

Every year in the summer months (June–September) the nomads of Southern Algeria migrate with all their belongings to the fertile northern plateaux, where along with every condition necessary for the breeding of Anopheles mosquitoes, there are, in the vicinity of certain European settlements, resident populations having a high malarial (splenic) index. Consequently the nomads get infected. In the summer of 1915 malaria was extremely prevalent among them; the author, taking haphazard twelve caravans, numbering 245 souls, which had camped in seven different plateaux, records 159 cases, of which 15 were fatal.

He recommends sanitary regulation of camping-grounds and watering places for the suppression of Anopheles, and immunisation, both of the nomads and of the residents of the plateaux, with quinine.

A. A.

CARTER (H. R.). **Notes from Field Work.—Malaria Survey of Impounded Waters.**—*Southern Med. Jl.* 1916. Aug. Vol. 9. No. 8. pp. 708–711.

It is fairly well known for certain parts of the world that different local species of Anopheles have different breeding seasons, and also that some species of Anopheles are more prone to infest dwelling-houses than others.

With regard to the first point, the author of this paper records the results of a survey of a particular pond-area in Alabama where, during the year 1915, periodic observations were made, between May and October, of the larvae of three species locally represented, namely, *A. punctipennis*, *A. quadrimaculatus*, and *A. crucians*. According to these observations larvae of *punctipennis* were always numerous; those of *quadrimaculatus* were not numerous until August-September, and those of *crucians* not until October. It was also noted that *quadrimaculatus* appeared to have a marked predilection for ponds, in preference to marshy places or streams.

With regard to the second point, *punctipennis*, though often enough found in outhouses and under residences, was only very rarely found in occupied houses, whereas *quadrimaculatus* was frequently found in occupied houses as well as in the other situations, the observations having been restricted, it should be noted, to daytime. A. A.

U.S. Public Health Reports. 1916. May 19. Vol. 31. No. 20. pp. 1227–1230.—**The Control of Mosquitoes. Whirligig Beetles (Dineutes) as a Possible Factor. With a Note on the Predacious Habits of Dineutes ("Whirligig Beetles") toward Anopheles Larvae.** By R. C. Derivaux.

It is well known that whirligig beetles (*Gyrinidae*), like several other common aquatic beetles, both in their adult and in their larval stages, feed freely upon mosquito larvae under aquarium conditions. Experiments made by the author of this paper showed that in the presence of floating débris larvae of Anopheles were safe, the whirligig beetles either failing to detect them or being unable to capture them.

A. A.

King (W. V.). **Experiments on the Development of Malaria Parasites in Three American Species of Anopheles.**—*Jl. Experim. Med.* 1916. June 1. Vol. 23. No. 6. pp. 703–716. With 8 plates.

This paper gives in detail the results of precise experiments, conducted in New Orleans in the months of November, December, and January, 1915–16, establishing the malarial susceptibility of *Anopheles punctipennis* and *crucians*, and comparing it with that of *Anopheles quadrimaculatus*. The susceptibility of *quadrimaculatus* was proved experimentally by Thayer in 1900, and has been repeatedly confirmed; that of *punctipennis* was, until recently, disputed, and that of *crucians* is now for the first time actually demonstrated.

The results of the examination of individual mosquitoes after feeding on infected blood in these experiments are thus summarised :—

A. punctipennis, with *Plasmodium falciparum* 33 per cent., with *P. vivax* 85 per cent.

A. crucians, with *Plasmodium falciparum* 75 per cent., with *P. vivax*, no test made.

A. quadrimaculatus, with *Plasmodium falciparum* 23 per cent., with *P. vivax* 85 per cent.

A. A.

Marzinowsky (E. J.). **De différentes espèces du parasite de la Malaria.** *Ann. Inst. Pasteur.* 1916. May. Vol. 30. No. 5. pp. 243–248. With 3 plates.

From prolonged observation the author supports the opinion that there are more than three malarial parasites of man, and by the name of *Plasmodium caucasicum* he describes and figures a new haemamoeba which he considers to be approximate to *P. falciparum*. It was observed in the blood of an inhabitant of the Black Sea littoral, who, after suffering during the summer from benign tertian, passed into a continued quotidian fever in the autumn. It is to be noted that the blood was not examined until the autumn, after the patient had been treated with quinine.

In this supposed new parasite the young forms are said to be smaller than those of *P. falciparum*, the chromatin more abundant, the vacuole smaller, and the nucleus more salient; the melanin is concentrated in a single peripheral mass, and the number of merozoites resulting from fission is 8 to 10; the individual merozoites are triangular, with an elongate nucleus obviously formed by fusion of two chromidia; in the figures the red blood-cells are only very slightly enlarged, but it is stated that they are rapidly destroyed, and often show both Schüffner's granules and Maurer's dots; the period is 48 hours; gametocytes were not observed, but the author refers to an uninterpreted figure (microphotograph) which seems to fill a red blood-cell completely and to have a large central vacuole surrounded by a broadish ring of small pigment-granules.

The author also refers to another supposed new parasite, also from a malignant case in Transcaucasia, believed to approximate to STEPHENS' *P. tenue*. But for the co-existence of ring forms this parasite might, in the author's opinion, rather have suggested a piroplasma than a haemamoeba. A. A.

BRUG (S. L.). **Die schwarzen Sporen ("Black Spores") bei der Malaria-infektion im Mückenkörper,** [Black Spores in the Malaria Infection of Mosquitoes.]—*Arch. f. Protistenk.* 1916. pp. 188–197. With 6 figs.

Working with *Culex pipiens* infected with bird-malaria the author encountered numerous instances of prolific crops of black spores. From a careful examination of the physical, chemical, and structural characters of these bodies he considers it in the highest degree probable that they are chitinous, and he proposes therefore that they should be called chitin-corpuscles.

He surmises that chitin formation is excited by a rupture or cracking of the wall of the sporocyst, and that the particular form and appearance of a "chitin-corpuscle" depend upon the time when this chitinization was provoked. A. A.

BARLOW (Nathan). i. **The Results of Intravenous Mercuric Chloride in 100 Cases of Malaria, and the Possibility of its Value in a General Antimalarial Campaign.**—*Amer. Jl. Trop. Dis. & Prevent. Med.* 1916. Apr. Vol. 3. No. 10. pp. 545–563.

ii. **One Hundred Cases of Malaria treated by Intravenous Mercuric Chloride, and the Possibility of its Use in a General Anti-Malarial Campaign.**—*Ibid.* May. No. 11. pp. 581–601.

i. The specific utility of $HgCl_2$, as an intravenous injection, in antimalarial operations is to be considered in a continuation of this paper; the present instalment deals mainly with some general principles of malarial prevention and some details of the therapeutic treatment of chronic malaria.

While allowing the sufficiency of antimosquito measures in settled and compact communities, and always advocating their rational employment, the author considers that the alternative policy of eliminating malarial infection from human carriers is easier, cheaper, and of quite unlimited application.

In the attempt to exhaust the human funds of malarial infection what the author has in mind is not a mere indiscriminate issue of prophylactic doses of quinine for establishing individual immunity, but an organized system of preventive measures by localities, measures in which the entire population of a locality participates, while immigration is supervised, the aim being to keep the blood of every individual or, at any rate, of the great majority, free from malarial parasites so that no infection of mosquitoes can occur in that locality.

Such a prophylactic policy implies the maintenance in any given area of a local malarial survey, and such a survey demands an adequate staff to carry out all necessary routine with reasonable despatch, periodical or seasonal examinations of the blood of the population (and in some individuals of other physical conditions also), the upkeep of individual records on the card system, and particular attention to chronic and relapsing cases and to the treatment of patients who resist or reject quinine. It also postulates in the staff, as the author does not fail to realize, certain moral attributes and diplomatic gifts that are generally understood to come rather by heritage than by taking thought.

For the rest, the author, in this introduction to the study of the value of mercury in the treatment of malaria, discusses to some extent the uses, action, and limitations of quinine, and emits some interesting physical and biological speculations to account for the resistance of the parasite in chronic and relapsing cases of malarial fever.

ii. The first fifty cases were treated with $HgCl_2$ alone, the second fifty with $HgCl_2$ in combination with quinine.

The dose injected was one-eighth of a grain of $HgCl_2$ in 10 cc. of normal saline solution.

The effect on the parasites, both schizonts and accessible gametes, is said to be directly destructive, but the immediate amount of destruction is limited, not complete, comprehensive, and overwhelming, and the author concludes that although if the number of parasites be small and there be no enlargement of the spleen $HgCl_2$ alone will frequently sterilize the blood of malaria, yet this limitation renders $HgCl_2$ by itself an uncertain remedy.

One of the most striking effects of $HgCl_2$ in combination with quinine is the very rapid reduction of an enlarged spleen, justifying the hope that this combination may establish a complete cure more quickly than quinine alone.

No ill effects worthy of mention followed the intravenous injection of $HgCl_2$. In three or four cases there was some local phlebitis, possibly due to the needle not completely penetrating all the coats of the vein. In one case there was salivation, and in another case albuminuria, in both cases transient. The slight and transient diarrhoea that occurred in eleven cases can hardly be considered an evil effect, the author thinks.

A. A.

Dennys (Geo. W. P.). **Iron and Arsenic as a Cure for and a Prophylactic against Malaria.**—*Indian Med. Gaz.* 1916. July. Vol. 51. No. 7. pp. 242–246.

An interesting paper, giving the author's experience of arsenic in the treatment of malarial fever, and strongly advocating the use of that drug in gradually increasing doses.

Early in his service the author's faith in the all-sufficiency of quinine (bisulphate) was shaken by its failure, though taken in enormous doses, to rid him individually of long-persistent attacks of malaria, and his confidence in arsenic was engaged subsequently by the cure which it effected in his own case.

For many years now he has employed arsenic, in combination with quinine and iron, for the treatment of chronic malaria (even in cases complicated by pregnancy) and of long-standing enlargement and induration of the spleen, and he gives abstracts of cases where this combination was successful after all methods of treatment by quinine alone had actually failed.

The formula recommended is Arsenious acid gr. 1/60, Ferri et Ammon. Cit. gr. 3, Quin. Sulph. gr. 1, in a tabloid; and beginning with one such tabloid daily after a meal, he gradually proceeds to four daily, continued if necessary for three or four months. In a few very persistent cases the number of tabloids has been increased to five or six daily. If there are symptoms of intolerance the dose is mitigated temporarily.

The author is convinced also of the efficacy of this combination, or even of arsenic and iron alone, as a preventative.

Although the author appears to regard the quinine as a spell rather than a potent ingredient of the tabloid, and although in one of his prophylactic experiments arsenic and iron (sulphate) alone were used, the fact remains that the treatment which he has found to be so successful in chronic malaria is a combination of arsenic and quinine.

A. A.

Dunley-Owen (A.). **A Note on Administration of Quinine.**—*S. African. Med. Rec.* 1916. July 8. Vol. 14. No. 13. pp. 196–197.

The author has obtained the best results in acute cases by giving bihydrochloride of quinine in ten-grain doses (combined with ten minims of tincture of orange) every four hours until the body-temperature has been normal for three days, then three times daily for a week, and after that in a five-grain tabloid every night for a month. Before the first dose of quinine ten grains of aceto-salicylic acid is useful to relieve headache and to promote diaphoresis. For children a rectal injection of 5 grains, followed by hourly injections of 2½ grains, may be given with safety.

A. A.

Sergi (Antonio). **La campagna antimalarica interepidémica.** [An Anti-Malarial Campaign in the Winter.]—*Malariologia.* 1916. Apr. 30. Ser. 1. Vol. 9. No. 2. pp. 64–69.

An article urging the importance of treating chronic cases of malaria throughout the winter at the public expense, so that these cases may not serve as foci of infection in the subsequent mosquito season. It is suggested that the cost of such treatment might appropriately be borne by the local authorities, instead of by the Central Government.

J. B. Nias.

SERGENT (Etienne). **Assainissement antipaludique et amélioration agricole simultanés et rapides d'une région infectée par un ancien lit de rivière (Oued Djer, Algérie).**—*Bull. Soc. Path. Exot.* 1916. July. Vol. 9. No. 7. pp. 504–509. With 1 plate & 3 figs.

An interesting account of the steps by which a marshy fever-stricken ravine in Algeria was reclaimed to healthful and profitable husbandry in the course of a few years.

The marsh was formed in the lower abandoned gorge of a river whose upper course had been artificially diverted, and was a nursery of Anopheles larvae. For its reclamation a syndicate of riverain proprietors supplied the labour, and the Government provided the skilled advice and supervision as well as the necessary subsidies. The steep sides of the ravine were cut away and sloped so as to fill in all the marshy bottom, except a narrow drainage channel down the middle. The bottom was then planted with willows, and the slopes with ash, robinia, acacia, ebony, and deciduous cypress. The expense came to 31,000 francs and the tract recovered amounted to between 4,000 and 5,000 acres.

In the following spring a few pools remained, but they quickly dried up.

Concurrently with these operations quininisation of the native population was carried on, and was continued as immigration into the reclaimed country proceeded.

Even in the first year after completion of the work there was a remarkable decrease both in Anopheles and in fevers. In succeeding years cultivation of the vine and the orange was introduced, lucerne was grown, and the slopes were planted with tobacco. Eventually the reclaimed area became so salubrious that it was free from fever in a year when prolonged spring rains followed by an excessively hot summer furnished optimum conditions for an outbreak of malaria.

A. A.

FOY (George). **The Spelling of Cinchona.** [Correspondence.]—*Lancet.* 1916. Aug. 19. p. 350.

In the *Lancet* of 12th August 1916 a correspondent resuscitated Sir Clement MARKHAM's appeal that the spelling of the name Cinchona should be altered to correspond literatim with the name of the supposed European sponsor of the bark—the famous Countess of Chinchon. To that the letter at present under reference is an answer, and the writer after pointing out that the sponsorial connexion claimed for the Chinchon family is very considerably a matter of surmise, whereas the vernacular name of the bark, Kina-Kina, seems to have been accepted as an audible fact, concurs in the judgment of the editors of the great English Dictionary that the established form, Cinchona, is so firmly fixed that any change would be inexpedient.

A. A.

BLACKWATER FEVER.

STEPHENS (J. W. W.). **Studies in Blackwater Fever. V. The Duration of Haemoglobinuria.**—*Ann. Trop. Med. & Parasit.* 1915. Dec. 30. Vol. 9. No. 4. pp. 539–542. With 1 chart.

An epitome and tabulated conspectus of 167 cases, showing the duration of the symptom to have been twenty-four hours or less in 80 cases, 1–2 days in 42 cases, 2–3 days in 30 cases, 3–4 days in 7 cases, 4–5 days in 5 cases, and in the 3 remaining cases 5–6 days, 7 days and 8 days respectively. The author offers these observations merely as data to be considered along with other specified factors, in a general synthesis of the pathological phenomena.

A. Alcock.

OTIS (Elmer F.). **A Few Cases of Blackwater Fever and of a Peculiar Entero-Colitis.**—*Amer. Jl. Trop. Dis. & Prevent. Med.* 1915. Dec. Vol. 3. No. 6. pp. 327–331.

This brief miscellany from Santo Domingo consists of remarks upon several cases of blackwater fever and a resumé of one of them, and a synopsis of a case which is diagnosed as "toxic entero-colitis." The chief symptoms of this case were a temperature fluctuating downwards to 97° F. from an initial rise of 103·6° F., depression amounting at the outset to collapse, and persistent and obstinate constipation; there was no pain except occasional headache, no abnormality of urine, and no enlargement of the spleen, and nothing is said about the condition of the blood, yet the author considers that it "has all the earmarks of malignant malaria," and alludes to a contingent relation to blackwater fever.

A. A.

UNDULANT FEVER.

SERGENT (Edm.), NÈGRE (L.) & BORIES (L.). **Epidémie de fièvre ondulante à Arzew et Saint-Leu (Dép. d'Oran, Algérie) en 1915.** *Bull. Soc. Path. Exot.* 1916. June. Vol. 9. No. 6. pp. 351–356. With 4 charts.

In parts of Algeria undulant fever has practically been stamped out, but in the department of Oran and in particular at Arzew active foci of the infection still exist. In 1915 an outbreak of the disease occurred at Arzew and Saint-Leu which presented some very interesting features. It lasted from February to May and affected 20 people, 13 military and 7 civilians. The first cases were noted from Saint-Leu and the greater number at Arzew were in the military who had been stationed at Saint-Leu two or three months before being admitted into hospital. The seriousness of the disease in the mortality and loss of efficiency for service is shown in the following table :—

Duration of Illness.

1–2 Months.	2–3 Months.	3–4 Months.	4–5 Months.	5–6 Months.	6–7 Months.
4	4	4	1	3	1
(2 deaths)	(1 death).				

The temperature charts show the prolonged irregular character of the fever. Clinically three cases were without any well marked characters ; one was of a typhoid type, one patient had orchitis which lasted three months, one had double sciatica lasting three months, and seven showed marked nervous depression with articular pains. Unusual complications noted were, ulcers of the stomach causing death from haemorrhage, broncho-pneumonia, pulmonary congestion with myocarditis causing death in the fifteenth week, meningitis with death at end of a febrile paroxysm.

In 1907 in this area 3·3 per cent. of the goats were found to be affected, as well as horses, asses and dogs ; in 1912 horses, mules, and asses gave agglutinating serum when tested by SÉJOURNANT. The infection was therefore enzootic. It is probable that owing to fatigue the military were specially susceptible and the organism found a favourable soil in them ; hence the severity of the epidemic. The germ was conveyed by the use of unboiled milk or fresh goat cheese, though in nine cases this was not proved ; the goats were undoubtedly the cause, directly or indirectly, of the epidemic. These were nearly all imported from Spain, originally being infected by the Maltese goats from Gibraltar. To stop the spread of the infection it was therefore necessary to interdict entirely the importation of these goats from Spain, or at least to submit them to a rigorous bacteriological examination.

P. W. Bassett-Smith.

NICOLLE (Ch.) & GOBERT (E.). i. **Seconde enquête sur les chèvres laitières de Tunis au sujet de la fièvre méditerranéenne.**—*Bull. Soc. Path. Exot.* 1916. Feb. Vol. 9. No. 2. pp. 86–95.

ii. **Recherches sur la fièvre méditerranéenne poursuivies à l'Institut Pasteur de Tunis. Troisième Mémoire.—Nouvelle enquête sur les chèvres laitières de Tunis.** *Arch. Inst. Pasteur de Tunis.* 1916. Apr. 1. Vol. 9. No. 3. pp. 157–175. With 1 map.

i. In 1909 it was proved that in Tunis the goats imported from Malta were those most infected and that the thorough measures taken by the government to prevent the importation of any fresh infected animals had given the most satisfactory results. In two years the number of positive infections in man had fallen from 63 to 23 and in 1914 these had decreased to 7, but in 1915 the number had again risen to nearly its old level; therefore a fresh enquiry was made into the number of infected goats. From July to December, 2,354 goats and 36 other animals were tested; of the goats 1,277 were of the Maltese breed and 1,077 were Arabian or crossed breeds. The Maltese were mostly found in the towns, the milch goats in Tunis numbering about 5,000. These were divided into 79 herds, numbering from 10 to 116 in each. It was found that the hygienic conditions of some of these were bad, the stables of the Maltese being the worst, the goat-herds generally living in close proximity with the beasts. For the tests, serum reactions were used and the test emulsion was made with a strain of *M. melitensis* isolated from a goat in 1909, in 7 per cent. of fluorite of sodium, eight million microbes per cmm. This fluorite emulsion has been found to be much more satisfactory than saline emulsions for both the human and animal tests.

A dilution of less than 1/20 was never used but 1/80 was found always to give definite results. The enquiry showed that in the Maltese goats the frequency of infection was infinitely greater than in the Arabian (11 times more often) and that those stables containing the greatest percentage of Maltese goats showed the highest number of infections; certain of these were particularly marked centres of infection.

It is probable that by passage the *M. melitensis* in Tunis has acquired an increased virulence to the indigenous goats and that the infection is spread from goat to goat by contagion; the infection of other animals appears to be negligible. The practical conclusions are that the same rigorous measures must be continued to prevent introduction of fresh infected goats but it is also necessary to stop the local infections from spreading by instituting a thorough service of inspection bi-annually of all the milch goats without exception, as well as the men and other animals inhabiting the stables. Goats in which the serum shows the agglutinating power higher than 1/80, confirmed by a second examination, should be killed, the proprietor being indemnified. Goats that react to 1/40 but not to 1/80 should also be examined a second time and if the titre has risen above 1/80 the animal should be killed. Distinctive discs should be fixed on to the examined animals and made obligatory. Hygenic measures must be carried out for the stables. Prophylactic inoculation for goats might be used but further work is required on the value of this measure. The importance of boiling all milk should be insisted on for the general population, and notification of cases of the disease in man made compulsory. If these measures are carried out

the number of infected goats will rapidly diminish and the health of the people will be safeguarded.

ii. In this third report the authors restate more fully what they have already brought forward in their second [reviewed above]. The value of the paper is greatly increased in that it gives copies of the ordinances promulgated by the Government of Tunis and introduces a plan of the town of Tunis and the exact localities in which cases of undulant fever were notified. The information and recommendations are however so slightly altered that it is unnecessary again to refer to them in detail, except to emphasise the fact that in 1915 there was a marked increase in the cases of melitensis infection in Tunis both among the human and goat population. It is therefore absolutely necessary to insist upon all the prophylactic measures recommended being rigorously carried out to prevent fresh importation of infected animals, and to stop the disease, which is at present in some of the herds, from being passed from infected to healthy goats.

The report should be carefully studied by all Public Health Officers who are employed in the endemic areas of the disease.

P. W. B-S.

IZAR (Guido). **Studi sull' infezione spontanea da micrococco di Bruce negli animali domestici.**—*Sperimentale.* 1916. June 9. Vol. 70. No. 2. pp. 137–158. With 5 tables & 1 fig.

In this long and careful study the author has brought together the results of many workers relating to the infection of the various domestic animals, but much is of purely historical interest. The diminution of the number of infected animals in Malta is pointed out as well as the increase of the diffusion of the disease in other countries. For detection of the animals so infected the serum and lacto-reactions are most important but, as was shown by HORROCKS, KENNEDY and CRAWFORD, in a series of animals examined by both methods the lacto-reaction gave an error of 28 per cent. The author describes the technique used by ZAMMIT, PULVIRENTI, PISANI, CANTIERI, and VIRGILIO, and of these he prefers that of PULVIRENTI. He points out, as others have done, the importance of using well accredited strains for the test and also of the recognition of the errors caused by paradoxal reactions. There is a long list of the animals which have been examined and the different percentages of positive results obtained by various observers, with tables of the observations made. These are summed up. Of 1,289 lactiferous animals examined, 1,253 were goats and 36 were cows; 11·8 per cent. of the goats and 2·7 of the cows gave positive milk reactions. He gives a figure showing how infections tend to be grouped together in certain areas, the disease being spread directly from one individual to another and from one group to another. Finally he gives a table of animals which might convey the disease from one country to another, examined by the serum test during a period of twelve months:—

	No. of animals.	Positive serum reactions.	Percentage of infected animals.
Dogs ..	268	2	0·7
Cattle ..	825	1	0·12
Goats ..	35	3	8·5

P. W. B-S.

LABONNOTTE (X.) & DELANOË (M. et Mme. P.). **Au sujet de la Fièvre ondulante à Mazagan.**—*Bull. Soc. Path. Exot.* 1916. Apr. Vol. 9. No. 4. pp. 207–211.

The authors describe the first two cases of undulant fever that have been recorded from Mazagan, Morocco, in two brothers aged 15 and 13. The first was attacked in September 1914 and was ill for four and a half months with the typical syndrome of undulant fever, waves of pyrexia, sweats, constipation, and joint pains. In February he went with his younger brother to France and the latter developed the disease. In both cases definite positive serum reactions for undulant fever were obtained; in dilutions of serum up to 1/400 with *M. melitensis* for the elder brother and up to 1/500 with *M. paramelitensis* for the younger. It is important to note that the disease in the latter case was relatively shorter and less severe than in the true melitensis infection of the elder brother. It is stated that the elder boy did not drink goat's milk before he was taken ill, but the author points out that troops of Maltese goats which had been imported from Spain are frequent in the streets and that milk is sold from house to house, but as no laboratory exists at Mazagan examinations of the milk have not been made. As a possible though improbable origin of the disease the fact is noted that the father of the two boys was a butcher and infection may have been derived from sheep infected with the *M. melitensis.* Similar prophylactic measures as are in force in Tunis and Algeria are urgently required for Morocco. P. W. B-S.

CORTESI (Primo). **Il primo gruppo di casi di febbre di Malta in Romagna.**—*Riv. Crit. Clin. Med.* 1916. Feb. 12. Vol. 17. No. 7. pp. 73–75.

The author describes four cases from Coccolia in the Commune of Ravenna. In all these the diagnosis was confirmed by serum reactions and blood examinations isolating the specific micro-organisms. Two of the cases were in the same family and the others lived near to them; three were milk sellers. The cause of the infection, whether from the milk of the cows or from faecal or urinary infection, was not proved, further experimental researches being required. P. W. B-S.

MAXWELL (J. Preston). **Undulant and Paratyphoid Fevers in Fukien Province.**—*China. Med. Jl.* 1916. Mar. Vol. 30. No. 2. pp. 100–103.

These diseases have up to the present been rarely recorded from China. The author reports a typical case of undulant fever; the patient was his own cook, so that the symptoms were carefully observed, and a positive serum reaction was obtained, but no etiological data are given. Three other probable cases had been seen by the author but had not been definitely proved. Typhoid is not uncommon in the districts. Some abnormal forms of fever led to further examinations and two cases are recorded in which the serum reactions were positive for paratyphoid B, negative for paratyphoid A, and typhoid. The first case was complicated with amoebic dysentery and ended fatally but no post-mortem was made. The second was admitted for malaria, malignant ring parasites being present in the blood; these disappeared under quinine treatment but the fever persisted. P. W. B-S.

LUNGHETTI (Bernardino). **Contributo allo studio anatomo-patologico della febbre melitense.**—*Riforma Med.* 1916. July 26. Vol. 32. No. 26. pp. 697–705.

The great variability of the clinical pictures of undulant fever and the low mortality of the disease have induced the author to describe in detail the anatomical pathological changes found in a case of his own in which very full records were kept, the autopsy being made 30 hours after death. In this examination the chief characters noted were congestion of the meninges, slight myocarditis, oedema of the lungs, marked intestinal catarrh with increase of lymphoid tissue, enlarged mesenteric glands, large liver (1,550 grams), large dark spleen (200 grams). The *M. melitensis* was isolated, *B. coli com.* and *B. faecalis alkaligenes* were found in the intestinal tract. The microscopical pathological results were those of a general congestion of the organs and viscera from the toxic action of a septicaemic condition caused by the *M. melitensis.*

There is a very complete short review of previous reports that have been published by different workers, who are named in each instance. These show how widely the micrococcus and its toxins affect the organs and tissues, but that it produces no definite diagnostic lesions. It affects profoundly the red blood cells and decreases the phagocytic activities of the white cells, but it is evident that the toxicity of different strains of the organism varies very much; this explains to a certain extent the contrary reports of many observers. The changes depend also largely upon the stage of the disease in which death occurred. The author draws attention to the importance of further experimental study of the infection in animals.

P. W. B-S.

CASTRONOVO (A.). **Su di un caso di febbre del Mediterraneo con emorragie della cute e della mucosa.**—*Malaria e Malat. d. Paesi Caldi.* 1916. Jan. Vol. 7. No. 1. pp. 20–22.

The author describes fairly fully a case of undulant fever in which there was marked haemorrhage both of skin and mucous membranes; as this is a rare complication it is important to recognise its occasional occurrence. The subject was an adult male, aged 20, whose family was proved to be free from any haemorrhagic diathesis. The first wave of the fever lasted 20 days; on the 25th day the symptoms and fever returned, and were associated with profuse epistaxis and haemorrhage from the gums; there was also some haematuria and bleeding into the bowel. Petechiae appeared on the skin of the arms and chest but none on the abdomen or legs. At this time the patient was removed to hospital and vigorous measures had to be taken to stop the haemorrhage from mouth and nose. There was little disturbance of the nervous system but the pyrexia was continued and the spleen was enlarged. Convalescence was slow. A serum examination for diagnosis gave negative reactions for typhoid and paratyphoid but positive agglutinations with the *M. melitensis* in dilutions from 1/50 to 1/2000. The case at one time was thought to be typhus but the diagnosis from typhoid was more difficult; this was however cleared up by the high agglutination reactions.

[The reviewer has noted haematuria in cases of undulant fever during late pyrexia periods, which came on without any definite cause. A haemolytic action has been attributed to the toxin of the specific organism. In South Africa haemorrhagic cases have also been reported (this *Bulletin*, Vol. 1, p. 78)].

P. W. B-S.

IZAR (Guido). **Mutazioni morfologiche culturali e biologiche in Vitro ed in vivo del micrococco di Bruce per azioni dei sali di chinino. Nota Preventiva.** [The Morphological, Cultural and Biological Mutations of Bruce's Microbe as acted upon by Salts of Quinine *in vivo* and *in vitro*.]—*Pathologica*. 1916. June. Vol. 8. No. 182. pp. 175–176.

The author made an elaborate study of the action of the salts of quinine upon the *M. melitensis*. He found the strains he was working with were very sensitive to these and by repeated cultures they are found to grow luxuriantly in strengths which were at first bactericidal, but morphological changes take place, chiefly bacillary and streptobacillary forms, with increase in size. With cultivation the growth is more dense and white, and biologically there is a loss of specific agglutinability and an increase of non-specific agglutinability. These changes were observed in an organism obtained from a case of low fever having the characters of undulant fever. The continued administration of salts of quinine to cases of undulant fever, from whose blood the *M. melitensis* had been isolated and whose serum gave definite agglutination reactions, rendered the serum very agglutinable to a strain grown in broth cultures augmented with salts of quinine, as well as to the organism isolated from the blood. He also found that serum of undulant fever cases which had been treated with salts of quinine had marked specific agglutination reactions with the *M. paramelitensis*, whilst an immune serum for the *M. paramelitensis* gave good agglutination reactions to the two strains of *M. melitensis* grown in the quinine treated broth and to the strains obtained from the blood of patients treated with quinine. Finally he states that the effect of quinine on the strains of *M. melitensis* in both man and animals is to give them the morphological, cultural and biological properties of *M. paramelitensis* of NICOLLE.

P. W. B-S.

YAWS.

RICONO (M.). **Yaws and Similar Diseases in South Africa.**—*S. African Med. Rec.* 1916. Mar. 25. Vol. 14. No. 6. pp. 83–89. With 6 plates.

The author gives details of eight cases of yaws in men and women (all but one natives), which occurred in the Mount Fletcher district, South Africa, during 1914–15. The cases were watched from the first examination to practical recovery. The parts most frequently affected were the genitals, scalp, mouth and nose orifices, face, axillae and extremities. It is worthy of note that Mount Fletcher is 5,500 feet high, and so is mountainous and cold, and yaws does not usually occur in such situations. The differential diagnosis from syphilis is given.

Salvarsan and neosalvarsan were found in yaws to be "ideal remedies." As a rule, a single muscular injection in moderate dose (0·4 gm.) is sufficient. The patient is cured in about ten days.

Six cases of granuloma inguinale are mentioned, and two of them are described in detail. Salvarsan had a slow curative effect.

Pyosis caffra is also described. It is a contagious skin disease, very common in native territories. It is probably of streptococcic origin, chiefly affects children, and is more prevalent during the hot damp season. Crusty lesions, especially of the extremities and buttocks, occur in children. The treatment is tar, sulphur or salicylic ointment after a good cleansing of the affected parts. Potassium iodide is beneficial.

The paper is illustrated by 26 photographs.

A. Porter.

KNOBEL (J. B.). **Yaws in the Military Hospital at Keetmanshoop. S. W. A.**—*S. African Med. Rec.* 1916. May 27. Vol. 14. No. 10. pp. 151–153. With 1 fig.

An account is given of a family of five Klip Kaffirs, sent to the native hospital at Keetmanshoop, supposed to be suffering from syphilis. Yaws was found to be the real malady. The father had a rash which "more resembled combined successive crops of vaccination pox from the fourth to the twelfth day old." They contained no lymph, were not particularly sensitive to scratching, and the older ones were crusted over with "yellowish dry cheesy matter, fluffy in the centre." The face and head bore a closely crowded mass of nodules, but the lips and skin around were clean. A few nodules were scattered on the trunk, the scrotum and perineum. The head and neck were most affected. The appearance of the three children was different from that of the father. The mother was not affected. Treatment with arsenic pills was used and the man had injections of salvarsan. Three other cases of Hottentots are also described. The cases all responded to treatment with arsenic in hospital.

A. P.

CASONI (Tommaso). **La framboesia tropicale a Tripoli. Su alcune particolarità cliniche e terapeutiche.**—*Malaria e Malat. d. Paesi Caldi.* 1915. Sept.–Dec. Vol. 6. No. 5–6. pp. 223–236. With 5 figs.

During the course of his large experience from August 1912 to September 1915, the author has encountered only eleven cases of yaws in Tripoli. Two of the patients were Jews and the remaining nine were Arabs. The eleven cases are described in some detail and some of them are pictured. The symptoms and the distribution of the eruption were much like those given in general text-books of tropical medicine, but a few features were slightly different. Headache, high fever, gastric disturbance, diarrhoea and rheumatoid pains were absent from the primary stage. The early form of eruption persisted throughout the disease, and the initial lesion was still visible when the secondary stage ensued. Tertiary forms of yaws have been seen. *Spirochaeta pallidula*, that is, *Treponema pertenue* was demonstrated in four cases only.

The treatment consisted in the administration of salvarsan intravenously in doses of 50 centigrams for adults, while for youths 40 cg. was used. In two cases only was a second injection needed to effect a cure.

A. P.

Van den BRANDEN. **Le sel sodique du Salvarsan cuprique dans le traitement de la Trypanose humaine, du Pian et de la Syphilis.**—*Bull. Soc. Path. Exot.* 1915. Oct. Vol. 8. No. 8. pp. 582–586.

Cupric salvarsan was tried by the author in Belgian Congo in 12 cases of yaws and six cases of syphilis. Intravenous inoculation was used for adults, but for children injection into the muscles of the buttocks, this producing induration at the seat of inoculation. Distilled water containing 5 per cent. solution of ordinary sugar was used in varying quantities as a solvent for the salt. The lesions of both yaws and syphilis rapidly disappeared under treatment. In yaws the cure was definitive, while in syphilis certain relapses occurred after short treatment.

Tables are given of 12 cases of yaws, of which 10 were cured, the remaining two not coming again for examination. Of the six syphilitics, five were cured and one showed great improvement.

The sodium salt of cupric salvarsan has treponemicidal properties like those of salvarsan and neosalvarsan.

A. P.

BERGEN (L. G.). **Ueber das Ergebnis der Behandlung der Framboesia tropica (Yaws) mit Salvarsan und Neosalvarsan im Lazarett in Paramaribo.**—*Arch. f. Schiffs- u. Trop.-Hyg.* 1915. Sept. Vol 19. No. 18. pp. 481–490. With 4 figs. & 9 curves.

The author has treated many cases of yaws with salvarsan and neosalvarsan in the hospital at Paramaribo, Dutch Guiana. Adult

patients usually received intravenous injections, and children intramuscular ones. Sometimes a painful swelling appeared at the site of inoculation, but the pain diminished after a few days.

The doses of salvarsan used were :—

For adults	600 mg.
Aged 18–20 years	500
16–17	400
10–15	300
7–10	200
5–7	150
3–5	100
Infants to 2 years	50

The dose of neosalvarsan was one and half times that of salvarsan.

Treatment intramuscularly took somewhat longer to effect a cure. The time required for healing, based on 1,786 patients, was as follows :— If treated intravenously, the average time for healing was 11 days, the shortest time was two days. If intramuscular inoculation was practised, the average time was 13 days, the shortest time two days. With salvarsan, the average time for apparent cure after intravenous injection was 9 days, after intramuscular treatment 12 days. With neosalvarsan, after intravenous inoculation the time was 13 days, while after intramuscular injection the time was 14 days. The longest time for apparent cure was 135 days with salvarsan, 84 days with neosalvarsan. In many cases the papules had dried up the day after injection, while the majority of patients were healed in about 14 days.

The number of relapses varied with the drug and the mode of administration. Out of 1,626 patients treated intravenously with salvarsan, 4·92 per cent. relapsed in a period of 34 months ; of 655 treated intramuscularly, only 2·6 per cent. relapsed in the same time. It is possible that some cases were reinfections and not relapses.

Various races of men were treated. They included natives of Surinam, British India and Java. Sex seemed to have no influence on the incidence of the disease. More men were treated than women, but men preponderated in the colony. The number of yaws cases appeared to be greater in the dry season. Blindness after the use of salvarsan was not observed.

A. P.

Rutherford (C. G.). **Report on the Treatment of Parangi (Framboesia or Yaws) in the Government Hospitals of Ceylon, by Salvarsan, Arsenious Iodide and Arseno-benzol.** — MS. Report received in Colonial Office November 26, 1915.

The report deals with the treatment used in Ceylon for the disease termed " Parangi," yaws or framboesia, by intramuscular and intravenous injections of salvarsan, arseno-benzol and substitutes that have been tried since the two former drugs became difficult to obtain.

From 1911, when the use of salvarsan for yaws was introduced in Ceylon by CASTELLANI, until 1914, the remedy was used with much success and in extended areas in the island. It was found that old cases with bone lesions were more resistant to the remedy than others not so far advanced. Few cases of relapse occurred.

With a view to finding a substitute for salvarsan and arseno-benzol, Dr. SPITTEL has experimented with satisfactory results, intravenous injections of arsenious and mercuric iodide being employed. "At the commencement of this method of treatment 3 to 5 cc. of a standard solution of arsenious and mercuric iodide was injected intravenously every fifth or seventh day, according to the amount of reaction. Five to seven of such injections constituted a course." Medical officers to whom the solution was supplied, reported favourably on its curative effects, but remarked on its relatively slow action compared with salvarsan. After further work, 8 to 10 cc. of the solution for an adult male with a proportionate reduction for women and children was used, and ultimately a dose of from 10 to 15 cc. Early amelioration of the morbid conditions was noticed. In some cases the patients left hospital before the completion of the course of treatment, but it was noticed that few returned, as would have been the case had there been serious relapses, while other patients from villages to which treated cases had returned came for treatment.

It is desirable that the population should be familiarised with the idea "that (1) Parangi is an infectious disease conveyed from person to person by contact, (2) that it can be prevented, (3) that it can be cured, (4) that the treatment is practically free from danger, and in most cases permanent."

Two tables showing the quantities of the afore-mentioned drugs distributed to Ceylon hospitals from 1913 to 1915 are appended.

A. P.

THOMSON (G. W.). **Report on the Treatment of Yaws in Jamaica, by the Castellani Method.**—MS. Report received in Colonial Office Apr. 20, 1916.

The present report deals with the treatment of 28 cases of yaws at Montego Bay, Jamaica, by CASTELLANI'S method [see this *Bulletin*, Vol. 5, p. 422]. Three were treated in hospital and twenty-five as out-patients.

The author summarises his results as follows :—

"(*a*) Treatment by this method is very successful. There is very little improvement noticeable in the eruption and pains for the first 10 to 14 days. After this improvement is very rapid and there is complete cure of all symptoms in six weeks from the commencement of treatment.

"(*b*) The combination of drugs in the Castellani method is a very happy one as the drug is well tolerated by the stomach and in no case has digestion been disturbed. Nor has there been any symptom of iodism in any case.

"(*c*) The treatment while not so effectual for outpatients is yet far in advance of the old treatment for yaws for these patients, but it is better

suited for hospital cases as one is then certain that the drug is being taken and as a matter of fact outpatients do not improve so rapidly as in-patients.

"(*d*) The method followed was to give full doses three times a day for 15 days; then after a lapse of five days without medicine, give full doses three times a day for 10 days, then an interval of five days without medicine, and again full doses for 10 days; after which time there is complete cure.

"(*e*) In this time the patient if above 14 years of age takes nearly 1 lb. of Pot. Iodide and over 2 ounces of Sod. Salicylate; the cost of which is the one objection to the universal use of this method of treatment.

"(*f*) I attach photographs of one case treated by this method before and after treatment.

"(*g*) The time is too short to say whether the cure of these cases is permanent, but up to the present time, a full two months after treatment has been discontinued, there has been no return of symptoms."

A. P.

MISCELLANEOUS.

MADRAS. **Annual Report and Statistics of the Government General Hospital for the Year 1915.**—65 pp. f'cap, 1916. Madras: Supt. Govt. Press.

Of the 500 beds available, two-thirds for non-Europeans and the rest for Europeans, 401·32 was the average occupied during the year. The total number of in-patients treated was 7,563 (1,823 Europeans)* and of out-patients 62,858 (5,900 Europeans). A table shows the deaths and their causes amongst Europeans and non-Europeans for the years 1914 and 1915. Of malarial fevers 8,821 cases were treated; of dysentery, 1,630. The malarial figures differ little from those of the preceding two years. It is noted that "little malaria was met with during the decennium 1903–1912, but since then Madras has been visited by a severe epidemic" [see this *Bulletin*, Vol. 5, p. 41].

Operations to the number of 2,740 were performed on in-patients with a mortality of 3·14 per cent.

Of enteric cases treated 91 were in Europeans and 124 in non-Europeans. In 1913 the number of non-European cases was 37, in 1914, 78, so that these figures "would seem to point to a very great increase in the incidence of enteric among non-Europeans."

The post-mortem examinations made numbered 84 (there were 440 deaths). A series of statistical tables follows. That below is made up from two, and shows some of the chief diseases as well as those usually recognised as tropical met with among European and Eurasians on the one hand and Indians on the other. [With regard to the heading "Rheumatic fever and rheumatism" it would be desirable if possible to have these conditions noted separately.]

	Europeans and Eurasians.	Indians.
Diseases of digestive system other than appendicitis	269	884
,, ,, respiratory system except pneumonia and tubercle	134	214
Enteric fever	124	91
Malaria	104	261
Tubercle of the lung	89	254
Dysentery	83	246
Diseases of connective tissue	81	433
,, ,, circulatory system	58	166
Pyrexia of uncertain origin	48	73
Syphilis	35	130
Diseases of liver other than abscess	23	146
Kala Azar	12	27
Anaemia	10	120
Abscess of Liver	3	14
Leprosy	2	9

The number of patients was, Europeans and Eurasians 1,823, Indians 5,740.

* This figure appears to include Eurasians.

A few observations may be culled from the special reports. Those from the physicians' wards show that benign tertian was seen four times as often as malignant tertian, but the entries of "chronic malaria" outnumber those of benign tertian. Four cases of infective granuloma were successfully treated by X rays. Major T. S. Ross, I.M.S., notes that in 90 per cent. of 138 cases of dysentery amoebae were found. There were "only a few patients with dysentery who were not also suffering from pyorrhoea alveolaris and out of 50 cases of the latter only in one case could no amoebae be found in the pus from the gums."

The Report contains much that is of value to those responsible for the management of hospitals in the tropics; the experience that has been gained may be judged from the fact that a table gives the Nominal Register of the Medical Officers of the hospital from the year 1830.

A. G. B.

SMITS (J. C. J. C.). **Mededeelingen uit het Centraal-Hospitaal der Sennah Rubber Company Ltd. te Bila (Oostkust van Sumatra). IV. Klinische aantekeningen op de jaarrapporten over 1914. Malaria, Dysenterie, Kala-Azar, Beriberi, Pellagra.** [Contributions from the Central Hospital of the Sennah Rubber Company, Bila, Sumatra. No. 4. Remarks on the Medical Report for 1914.]—*Geneesk. Tijdschr. v. Nederl.-Indië.* 1916. Vol. 56. No. 2. pp. 138–177.

This is a paper of observations, of the kind usually made by a medical superintendent, on the annual medical report of the above Company for 1914. The total number of workers employed by the Company is nowhere stated, but the admissions to hospital during the year amounted to 2,092, with 99 deaths, a seemingly very creditable figure, as the mortality amounts to a little less than 5 per cent. The number of admissions and of deaths shows a great reduction on former years, but the author very candidly remarks that all similar undertakings in the tropics show such an improvement automatically, in proportion as the estate is brought under cultivation, and the accommodation for the workers can be improved. The constant importation of fresh coolies on to such an estate with large spleens, or with chronic dysentery, forms a continual obstacle to a reduction in the amount of malaria and bowel-complaint met with on these undertakings, and is a constant thorn in the side of the medical officer. Quinine prophylaxis is not carried out on this estate but, as the next best thing, all sufferers from malaria, even women and children, are brought into hospital for treatment, and are made to sleep in mosquito-free wards, while the remaining patients sleep under mosquito-curtains, so as to obviate all further infection. The complete extermination of mosquitoes is prevented by the existence of uncontrolled native villages outside. Uncomplicated dysentery was met with in 125 patients, of whom 21 died, B. Flexner furnishing 73 cases, B. Shiga-Kruse 23, and amoebae 21, with 8 mixed infections. Two cases of pellagra were met with during the year. Of kala azar there were six primary cases, and one in which the lesions were found post-mortem, the death itself being due to malarial cachexia.

J. B. Nias.

i. SITANALA (J. B.). **Report on the Medical Service of the Third Scientific Expedition to Southern New Guinea, 1912/1913, as it in so far pertained to the Charge.** [Also in Dutch].—*Mededeelingen van den Burgerlijken Geneesk. Dienst in Nederl.-Indië.* 1915. Vol. 4. pp. 1–14.

ii. SWELLENGREBEL (N. H.). **Report about the Mosquitoes collected by the Native Medical Practitioner, Sitanala, during the 3rd Scientific Expedition to South New-Guinea, 1912-1913.** [Also in Dutch.] *Ibid.* pp. 15–16.

i. The region explored by the Expedition " comprised the Lorentz (North) river and the country between this river and Mount Wilhelmina." The force totalled 276 men. The Expedition lasted apparently from September 1912 to April 1913. Malarial prophylaxis was (1) according to KOCH, a 0·5 gm. tabloid of " quinine " every seventh or eighth day ; (2) by the use of mosquito nets " which could not be properly closed on account of the overlap being insufficient " ; (3) by fumigation with fresh wood fires. To ward off beriberi, fresh forest produce was collected and vegetables were sown at the camps. A table shows that the chief disease was malaria (diagnosed clinically). Large numbers of mosquitoes, chiefly Anopheles, were encountered. A list of the medicines and apparatus taken is given.

ii. Dr. Swellengrebel states that the mosquitoes reached him " in a very sad state." They were collected at three places and were all *Myzorrhynchus barbirostris*, which according to CHRISTOPHERS and STEPHENS is a host of *P. falciparum.*

A. G. B.

de VOGEL (W. Th.). **Report about the Investigations carried out with Regard to the Sanitary Condition of the Port of Sibolga, Residency Tapanoeli, from 24th April until 6th May 1913.** [Also in Dutch]. *Mededeelingen van den Burgerlijken Geneesk. Dienst in Nederl.-Indië.* 1915. Vol. 4. pp. 62–98. With 2 maps, 2 charts & 10 figs.

Sibolga is a port on the north-west coast of Sumatra with about 4,700 inhabitants. It is a very good anchorage and the Dutch colonial authorities propose to develop it. The author was sent to arrange the details of a scheme for improving the sanitation, with a view to laying out a township. The town is built at the mouth of a mountain creek on a narrow strip of coast backed by the steep Barissan mountains. Here *Nyssorhynchus Willmori* [*Anopheles maculatus*], the carrier of malaria in the hills of the Malay peninsula, was sought for but was not found, and the results of spleen examinations render its presence improbable.

Dr. de Vogel's enquiries showed that almost everyone at Sibolga is attacked by malaria. Figures given show that splenic enlargement among children [ages not given] varied from 15 to 98 per cent., the last figure being obtained from an examination of 218 children. The species of Anopheles were determined by Dr. SWELLENGREBEL and the author as *A. ludlowi* and *A. rossi.* These were found chiefly in marsh. The bulk of the report is of local rather than general interest.

A. G. B.

THÉZÉ (J.). **Pathologie de la Guyane française (Paludisme, Fièvres continues et eaux de Cayenne, Dysenterie, Helminthiase intestinale, Lèpre, Filariose, etc.). Rapport sur les Travaux de l'Institut d'Hygiène et de Bactériologie 1914-1915.**—*Bull. Soc. Path. Exot.* 1916. June. Vol. 9. No. 6. pp. 376–402. With 2 maps & 3 charts; July. No. 7. pp. 449–469.

Malaria.—To this disease are due the numerous checks in colonisation of French Guiana since 1626, the date of the first occupation. The largest attempt was made in 1763 when 12,000 Frenchmen were disembarked at Kourou. In less than a year 10,000 were dead. Besides malaria they were attacked by dysentery and by what the author considers to have been typhus; it is doubtful whether yellow fever played any part. A similar tragedy on a smaller scale took place when victims of the Revolution were transported to this country. Later, the malaria was aggravated by (1) the abolition of slavery in 1848, because it led to the abandonment of clearing and cultivation, the best known methods of sanitation; by (2), the institution of the system of transportation (1852–4), because it continually brought in susceptible persons; and by (3) the discovery of gold in Guiana (1855), because it detached still more cultivators from the soil, and introduced large numbers of susceptible inhabitants of the Antilles. The population at the last census was 49,000.

The author then deals with the distribution of malaria. It is absent on the islands, common on most of the coast, especially between the capital, Cayenne, and the Oyapoc river, a region of great estuaries. The interior is believed to be free but most persons become infected on the river journey which must be taken to get there. The mosquitoes met with are *Culex pipiens*, *C. fatigans*, *C. albitarsis*, *C. taeniorrhynchus*, *Mansonia titillans*, a species of *Janthinosoma*, *Stegomyia calopus*, *Cellia argyrotarsis* and *C. albimana*. Concerning these two Anophelines the author writes: There is not a place in Guyana where one is not exposed to the bite of these carriers of malaria.—They are most numerous in the dry season when they breed in temporary collections of water. Figures are given showing the days of treatment for malaria at a penal station; it is calculated that for 4,000 men there were 100,000 days of illness. Pernicious attacks are common in October; they are accompanied by bilious vomiting and jaundice, and correspond to the description given by BAJON in 1777 under the name "*fièvre bilieuse ardente.*" Blackwater fever is rarely met with (two cases in 1915) though circumstances seem to favour it, and quinine haemoglobinuria is unknown.

In 577 positive blood examinations in 1915 *Plasmodium vivax* was found 218 times, *P. praecox* [*falciparum*] 335 times and *P. malariae* 24 times. Of the malignant tertians crescents were met with in 14 per cent., though only one or two slides were examined. In this the author finds that the malaria of Guiana resembles that of Upper Tonkin and Morocco. The frequency of crescents is attributed to the poor general state, defective diet, alcoholism, presence of intestinal parasites, etc.

In his consideration of prophylaxis the author points out that all the conditions in Guiana favour a high coefficient of endemicity, viz., the susceptibility of the population, ubiquity of anophelines, and frequency of gametes in the blood. His two years experience has shown him that

reinoculation is so frequent that the most solid immunity soon breaks down. Nothing hitherto has been done to prevent malaria. The population is scattered over vast areas; little money is available; there are 30,000 persons without medical assistance or direction in health matters. An "offensive prophylaxis" is consequently impossible; one must fall back on education and instruction in schools. Other measures recommended are concerned with the sale of quinine to the public, its distribution in schools, and its obligatory administration in penal settlements, and the installation of metallic wire gauze for workmen.

Continued fevers.—Typhoid fever, common in British Guiana [this *Bulletin*, Vol. 6, p. 240], is rare. It is met with most frequently in the penal settlements where it spreads by direct contagion. At Cayenne only three cases were seen in 1915, all paratyphoid A. The water supply of this place is described with a map. The water is collected in reservoirs 12 kilos away, and chemically and bacteriologically is very good. In the dry season however the supply has to be much restricted. Consequently the people have to store it and *S. fasciata* flourishes.

Dysentery.—Amoebic dysentery is rare. It was seen only 29 times in 20 months. It is usually mild. Bacillary dysentery has been recently detected and is believed to be common, though mild in type. A bacillus of the Flexner type has been isolated five times.

Intestinal helminthiasis.—Reference is made to papers on this subject by BRIMONT.* The author has examined 1,282 stools with the following results:—

Ankylostomes	found	607	times.
Ascaris	,,	218	,,
Trichocephalus	,,	220	,,
Oxyuris	,,	8	,,
Dipylidium of the dog	,,	2	,,
Anguillula	,,	6	,,
Schistosomum mansoni	,,	3	,,

Multiple infections were frequent.

Ankylostomiasis is general. Of the hospital patients 57 per cent. are infected, in the penal settlements 80–85 per cent. Ground itch is common at the commencement of the rains. Vigorous treatment with thymol has been successful in some 200 cases, but this must be carried out in hospital and is unsuitable for all. The author has therefore adopted and modified the method of FERGUSON of Georgetown [this *Bulletin*, Vol. 4, p. 525]. A cachet of 75 cgm. of beta-naphthol is given every morning for a month, without change of diet; the worms often disappear after three weeks. At Cayenne and other towns, the night soil is dumped just outside and is washed by the rain into a canal which runs close to the town. Septic tanks at the edge of a creek are advised.

Intestinal bilharziasis.—Four cases have been seen, all in persons from the Antilles. Two of them had been in Guiana twelve years. However the author is unable to affirm that they are not imported cases.

**Bulletin de la Société Pathologie Exotique.* 1909. Vol. 2. pp. 413 and 423.

Animal helminths.—*Haemonchus contortus* is common in sheep, causing pernicious anaemia. *Syngamus trachealis* is met with in fowls.

Leprosy.—An interesting section occupying 16 pages, which can be noticed only briefly. The history of the regulations made for the control of the disease is given from 1685 onwards. At first very strict, they were modified from time to time, always in the direction of laxity, till at present no regulations are really operative. Leprosy has however increased. The author says it is impossible to get the exact figures but he estimates from personal enquiry that there are about 83 lepers at Cayenne and about 300 in the whole colony. Of the Cayenne cases 33 are of the macular kind and of an average age of 13, and it is stated that it is characteristic of leprosy in French Guiana that it attacks chiefly children. Almost all the lepers belong to the poorer classes. The indigenous Indians escape. The author discusses the means of prevention at length, and concludes that the chief hope lies in school inspections which would "lead without fuss to the discovery of more than three quarters of the future infectives."

Filariasis.—This infection is widely spread; all its manifestations are common. A single examination of 133 persons at the hospital was positive in 37 instances, i.e., 28 per cent. were carriers of *Mf. nocturna*, and this figure would be a minimum because 24 of the patients had elephantiasis. *Mf. Demarquayi* was met with three times. An undetermined microfilaria was met with in three members of a family: in a woman and her daughter in small subcutaneous tumours, in one case in the inguinal region, in the other below the breast; in the husband of the first in the urine, associated with *Mf. nocturna.* Measurements are given. It was never found in the blood. "All its characters, as well as the lesions observed in the patients, bring it near to *Mf. volvulus*, if this species existed in America."

Tuberculosis.—This disease is not common. Hospital figures are given. The patient succumbs before he can spread the infection much. The disease however is spread by human contagion alone.

Syphilis is increasing. Of 169 Wassermann reactions 89 were positive.

Leishmaniasis of the skin and mucosa.—This is contracted in the forests of Upper Guiana. The parasites are easily found in young lesions, with more difficulty in old. Lesions of the mucosa are rare and never of the malignancy described by South American authors. Recovery is spontaneous after two or three years.

Toxoplasmosis was seen in a howling monkey, which died at the Laboratory.

A table is given of the 2,654 examinations made month by month in the laboratory in 1915.

In the author's conclusions he states that malaria, ankylostomiasis and leprosy are the chief diseases of French Guiana, all preventable. "To spend money on hygiene in a country like this is not only benevolence; it is also good business; without hygiene it is illusory to expect the Colony to go forward."

A. G. B.

ALGÉRIE. **Rapport sur le Fonctionnement de l'Institut Pasteur d'Algérie en 1915.** [Edmond SERGENT, Directeur.]—20 pp. With 1 chart. 1916. Alger: E. Pfister.

A large quantity of anti-small-pox, anti-enteric, and anti-cholera vaccine was prepared during the year for the army. Since October 12, 1914, a polyvalent anti-enteric vaccine has been used. The strains of paratyphosus A and B were obtained from Algerians. The vaccine contains 600 million bacilli per cc. Four doses are given of this, or a total of 3,300,000,000 microbes. Sufficient to vaccinate 90,716 men was prepared; the civil population serves as control.

The number of analyses made has risen from 3,506 in 1914 to 5,938 in 1915; their purposes are tabulated.

In the anti-rabic Section 1,565 persons were treated. Four died later than fifteen days after the cessation of treatment, giving a mortality of 0·25 per cent. Rabies was diagnosed in the biting animals in the laboratory or by a veterinary surgeon in 708 instances; there was a suspicion only in 870 cases. The animals were dogs, 942, cats 52, donkeys 8; the remaining 12 being horse, camel, goat, rat, rabbit and man. The number of persons treated is the highest recorded, the cause being relaxation of police measures owing to the war. The reservoir of the virus here as elsewhere is stray dogs.

Antimalarial measures have been continued despite a decrease in the personnel; 51,000 francs were expended. A chart shows the doses of antivariola vaccine sent out week by week; the highest reached was about 45,000. Many other vaccines and serums were prepared for both medical and veterinary use. Viruses for the destruction of rats and locusts, and diagnostic reagents were also turned out.

An account is given of the research work. In malaria it is found that the reduction of the reservoir by the quininisation of old paludics is the measure that is easiest applied in Algeria, but all preventive measures are practised where possible. SERGENT and FOLEY find that oil of eucalyptus, which is an African product, destroys body lice, penetrating clothes, when used in the proportion of 1 cc. to 125 square cm. of cloth. The clothes need not be changed. This method has been used by doctors, officers, and men at the front with complete success. A study is being made, by means of the tuberculin cutaneous reaction, of the degree of tubercular infection of Algerian natives; so far it has been ascertained that the degree of latent infection in a given native community varies with the distance which separates the community from the nearest European settlement; the nearer the European the greater the degree of infection. The effects of other researches which are detailed will be found in the pages of this or the *Tropical Veterinary Bulletin.*

A. G. B.

HEÑO M. (Emiliano). **Informe del Médico Jefe del Departamento di Sanidad del Ferrocarril de Antioquia para la Asamblea de 1915.** [Report of the Medical Director of the Sanitary Department of the Antioquia Railway [Colombia], for the Year 1915.] pp. 83–100. With 2 charts. Medellin: Imprenta Official.

The successful result of railway enterprise in the tropics depends as much as anything upon the care taken of the health of employés.

The gradients of railways generally require them to be taken along valleys in the proximity of malaria, and stations have to be located, as the traffic requires, in spots that are often extremely unhealthy. In addition a railway, if it communicates with the coast, is an excellent channel for the dissemination of yellow fever, and such diseases as dysentery and typhoid. A great responsibility therefore rests on those in sanitary charge of large undertakings of this kind. The present report is commendably brief in its letterpress, but is on the other hand extremely well furnished with tabular statistics. The mortality among the employés for the year under notice appears to have been most gratifyingly low, there being only 14 deaths in 2,206 cases taken into hospital. Of these, two deaths were due to yellow fever, one each to bacillary dysentery and typhoid, and, strangely enough, three to influenza. Injuries on the railway caused only one death. Quinine was regularly distributed among the employés, to the number of 642,000 pills. The result is seen in Chart No. 1. On the commencement of the distribution of quinine in the middle months of 1914, the monthly percentage of sick from malaria dropped from 9 per cent., to between 2 and 1 per cent. in the succeeding months.

J. B. N.

ARCHIBALD (R. G.), HADFIELD (G.), LOGAN (W.) & CAMPBELL (W.). **Reports of the M. and H. Laboratories dealing with the Diseases affecting the Troops in the Dardanelles.**—*Jl. Roy. Army Med. Corps.* 1916. June. Vol. 26. No. 6. pp. 695–724. With 10 charts.

This paper deals with the work carried out at M. E. laboratory during a period of five and a half months, August 1st, 1915 to January 15th, 1916, and with that at the H. laboratory from September 4th to the time of the evacuation. M. was only a few hours distant from the Peninsula. The authors write :—

"During the months of June, July, August and September there was a low rainfall accompanied by a comparatively high temperature and an affluence of flies and dust—in short, an ideal state of things well fitted for the spread of fly- or dust-borne diseases.

"In October and the following months the fall in the temperature and the increased rainfall had a determining influence in the diarrhoea and amoebic dysentery incidence. The former practically disappeared, while the latter was almost entirely replaced by the bacillary type of the disease. It was also observed that, coincident with the change in the climatic conditions, there was an increase in the paratyphoid A incidence ; indeed, during the months of December and January it had almost entirely taken the place of the paratyphoid B infection."

The Dysenteries.—From July to October the type prevalent was the amoebic. Other organisms were always sought. "In the majority the exhibition of emetine was a therapeutic success provided that a total amount of ten grains had been administered over a short period."

In December the sole type of dysentery was bacillary. The cases responded in a striking manner to a polyvalent-dysentery serum. Among 69 organisms isolated B. Shiga was obtained 35 times, B. Flexner 23, and in 11 instances the type was unidentified owing to failure to respond to specific agglutination tests. Of 518 dysenteric stools 70 per cent. were due to amoebae, 13 to bacilli, and in 17 per cent. no causal organisms were found.

The Diarrhoeas.—These were very prevalent in August to October. Under heading "sand-diarrhoea" a common type is discussed but the authors seem to think that flies were at least equally responsible. "The predominant organism was a non-lactose-fermenting diplostreptococcus which grew readily on McConkey's medium in the form of delicate, clear colonies." *Trichomonas intestinalis* was observed on 57 occasions.

Malaria.—Subtertian parasites were found twice, and benign tertian 24 times. Anophelines were found breeding in the vicinity of H.

Relapsing Fever.—Forty-six cases were diagnosed by blood examination. There were two types. One was more severe; jaundice and liver and splenic enlargement were invariably present, and pulmonary symptoms were absent. In the other jaundice and splenic enlargement were uncommon, and pulmonary symptoms were usually present.

Infective Jaundice.—Evidence is still lacking as to whether an organism is concerned in the etiology of this condition. Blood cultures indicate that bacillaemia is the exception.

Typhoid and Paratyphoid Fevers.—These are considered at some length—methods, clinical features, duration of the bacillaemia, characters of the bacilli, preventive inoculation, course of the epidemic, other organisms in the blood, concomitant infections. The section is summed up thus:—

"(1) The total typhoid incidence was very low.

"(2) The results showed the efficacy of typhoid inoculation against typhoid fever and its inefficacy against paratyphoid.

"(3) Blood cultures should always be done in the first week in cases with the symptom group already described.

"(4) Attention is drawn to the epidemic of paratyphoid B fever during September and October and the first half of November, and its sudden substitution then onwards by paratyphoid A fever."

The last ten pages contain notes from the Cape H. Laboratory by Lieut. W. Campbell. It is stated that the bulk of the records were lost during the evacuation.

Water Supplies.—Much time was spent in the bacteriological examination of water supplies. "In the vast majority of samples *B. coli communis* was recovered from 0·01 cc. of specimen." *B. paratyphosus* B was isolated from a shallow well. Chlorination was never performed at less than one part per million available chlorine, and chlorination at four parts gave the best results. "The experience at H. has shown that there can be no question regarding the value of chlorinating doubtful or bad water supplies."

Amoebic Dysentery.—In over 150 cases of dysentery examined in September and October 65 per cent. of stools contained entamoebae, the characters of which are given.

Bacillary Dysentery was rare; B. Shiga was found in five cases, B. Flexner in one.

Flagellate Diarrhoeas.—Trichomonas was found to be the agent in eight cases. They were treated by "the exhibition of a solution of potassium permanganate and rectal injections of quinine (strength 1 in 5,000)."

Epidemic Jaundice.—Catarrhal jaundice formed the greater part. A chart is given showing the relationship between prevalence of

diarrhoeal diseases and jaundice. The former are seen to be most prevalent in August and September, especially September, the latter in October. No evidence was obtained of a specific micro-organism.

Diphtheria was not infrequently met with. It was mild. Two carriers were detected.

Gallipoli Sore.—This is the septic or trench sore common among the troops on the Peninsula.

"The lesions were divisible into primary and secondary—the primary being traumatic ulcers and the secondary being vesicles, which later developed into ulcers simulating those of the primary lesions. The favourite sites of the primary lesions were the posterior aspects of the fingers and the dorsal metacarpal areas of the hands; while those of the secondary lesions were both aspects of the forearms and hands, though the upper arms and the lips were by no means immune."

"The only organism constantly present in the lesions was a Gram-positive diplococcus which could always be obtained on culture as well as demonstrated in direct preparations from the sores and vesicles."

A slight injury was in most cases antecedent. The primary lesions were indolent ulcers "taking anything between two weeks and three months to heal." The secondary lesions usually ended in similar ulcers.

A. G. B.

JOHNSTON (J. E. L.). **A Summary of an Entomological Survey of Kaduna District, Northern Nigeria.**—*Bull. Entom. Res.* 1916. May. Vol. 7. Pt 1. pp. 19–28. With 2 sketch maps.

The centre of the district surveyed was the native town of Doka, near the site of the future capital of Nigeria, on the river Kaduna at 2,200 feet. It was made in August 1914 "in unusual weather conditions"; the rainfall for the year had been little more than half of that for the first eight months of 1913. Several places within 20 miles were visited. Sketch maps show the position of the herds of cattle examined and where tsetse flies or infected cattle were found. Though only three Glossina (one *tachinoides*, two *palpalis*) were caught there is no doubt that they occur elsewhere. Of 150 blood films examined from cattle 12·6 per cent. showed trypanosomes, and 26 per cent. piroplasms. The trypanosome "in most cases was of the *T. vivax* type." Of the mosquitoes caught *Culiciomyia nebulosa* formed 51·8 per cent., *Anopheles costalis* 14·19 per cent., *Culex duttoni* 14·19 per cent. The rest include *Culex fatigans* and four species of *Stegomyia* (*S. fasciata*, 3·7 per cent.). A list of the Culicidae, Tabanidae, Muscidae, Hippoboscidae and Ixodidae obtained, with localities, concludes the paper.

A. G. B.

CARTER (HENRY F.). **On Three New African Midges.**—*Ann. Trop. Med. & Parasit.* 1916. Apr. 29. Vol. 10. No. 1. pp. 131–138. With 1 plate.

The midges described belong to the Ceratopogoninae sub-family of the Chironomidae. Whether they are blood-suckers is unknown. One, a genus of *Forcipomyia*, Meig., comes from the Gold Coast (Le FANU); the others are species of *Culicoides* and were collected near the Gizeh Pyramids by Professor J. W. W. STEPHENS. The plate contains six figures.

A. G. B.

MACFIE (J. W. Scott) & INGRAM (A.). **New Culicine Larvae from the Gold Coast.**—*Bull. Entom. Res.* 1916. May. Vol. 7. Pt. 1. pp. 1–18. With 14 figs.

The larvae here described, with figures, are those of *Stegomyia metallica* Edw., *S. luteocephala* Newst., *Ochlerotatus irritans* Theo., *O. sudanensis* Theo., *Culex pruina* Theo., *Culex* sp. ?—attributed by Dr. W. M. GRAHAM to *Culex pruina* Theo., *Culex insignis* Carter, *C. ingrami* Edw., *C. consimilis* Newst., *Eumelanomyia inconspicuosa* Theo., *Mimomyia hispida* Theo., *Uranotaenia annulata* Theo., and *U. alboabdominalis* Theo. Their breeding places are given.

A. G. B.

GRIFFITTS (T. H. D.). **A Mosquito Collecting Device.**—*Jl. Amer. Med. Assoc.* 1916. July 8. Vol. 67. No. 2. p. 117. With 3 figs.

The figure and description give a good idea of this trap, which seems to be specially suitable for catching uninjured living specimens. The truncated cone may be made of glass or celluloid, or the whole may be made of celluloid, which has the advantage of lightness and being non-breakable. The trap end is placed over the mosquito which passes at once into the tube. Escape appears to be a rare event. Ten mosquitoes are probably sufficient for one tube if they are to be used experimentally in the laboratory, but they can of course, as caught, be transferred to other containers.

A—Longitudinal Section.
B—View showing trap device placed in tube.
C—Collection device in wooden case to prevent breaking.

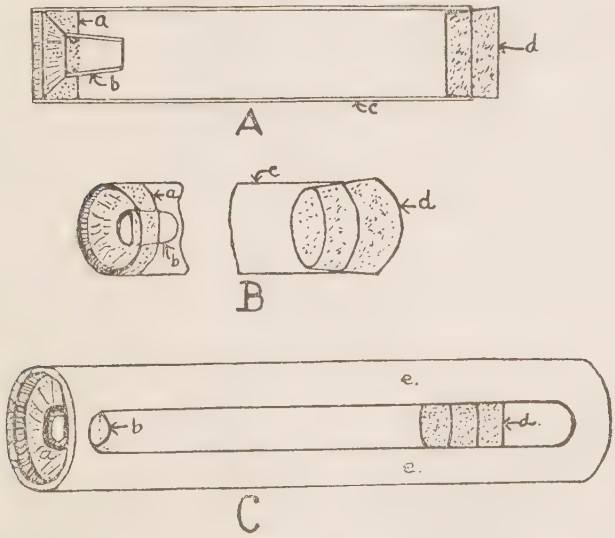

Device for collecting mosquitoes: *a*, funnel-shaped cork stopper three-eighths inch thick having central opening half an inch in diameter; *b*, small glass tube of truncated cone shape three-fourths inch long; diameter of large opening, half an inch; of small opening, three-eighths inch; *c*, glass tube 5 inches long, 1 inch diameter, open at both ends; *d*, cork stopper for untrapped end; *e*, wooden cylinder to prevent accidental breaking of tube.

A. G. B.

BALFOUR (Andrew). **Fly-Traps for Camps, Hospital Precincts and Trench Areas.**—*Jl. Roy. Army Med. Corps.* 1916. July. Vol. 27. No. 1. pp. 61–72. With 9 figs.

The fly traps described were devised by Balfour in conjunction with an engineer, Mr. W. H. McLEAN, and Mr. SMITH, manager of Luna Park, Heliopolis. They are three in number and are alike in essential particulars, differing chiefly in size and cost. The flies enter through slits under wire netting. The intermediate form, which is recommended for camps, is constructed of wood, canvas, glass and wire gauze and in Egypt costs about £4. It weighs 96 kilograms.

"Its powers of attraction depend on three main factors—i.e., the fact that it is well lighted, the fact that the air in its interior is warmed by means of the glass roof or, if necessary, by using a small native charcoal stove, and the fact that it can be baited with material most attractive to flies. No doubt, also, the presence of flies in the trap serves to attract others to it . . . Very few flies leave the trap once they have properly entered it, for they find it is all they desire in the way of food, warmth, light and shelter."

The baits are jam, marmalade, milk and sugar, used damp tea-leaves, cheese, a paste made of lentils, etc., which are placed on a shelf running round the interior. Chicken entrails are very effective. Fish refuse and human excrement (protected by gauze) may also be used. To get rid of the flies Keating is introduced on an enamel plate placed over the charcoal stove. All the traps have been tested at Luna Park.

Illustrations are given and plans. "In 24 working hours" the intermediate trap "may easily catch 10,000 flies."

It is admitted that they will never solve the fly problem, but it is claimed that they will be useful auxiliaries.*

A. G. B.

TOWNSEND (C. H. T.). **A New Generic Name for the Screw-Worm Fly.**—*Jl. Washington Acad. Sci.* 1915. pp. 644–646.

After a careful examination of the subject Townsend finds that there is no generic name in existence which can be used for the screw-worm fly, hitherto known as *Chrysomyia macellaria*. *Chrysomyia* will not do because this genus is confined to the Old World and the New World species are generically distinct. Other names fail for reasons cited. He therefore supplies the deficiency, giving the name *Cochliomyia*, and defines the new genus. It appears to be grouped with *Pollenia*. The writer has collected a species of *Cochliomyia* in the Andes at 12,000 feet, which is distinct from *macellaria*.

A. G. B.

---

*Those interested in fly traps should consult also "Flytraps and their Operation," by F. C. BISHOPP, Farmers' Bulletin, 734. 1916. June 10. U.S. Dept. Agriculture, Washington, D.C. Five sorts of traps are figured.

i. PEACOCK (A. D.). **The Louse Problem at the Western Front.**—*Brit. Med. Jl.* 1916. May 27. pp. 745–749. With 8 figs.; June 3. pp. 784–788. With 2 figs.: and *Jl. Roy. Army Med. Corps* 1916. July. Vol. 27. No. 1. pp. 31–60. With 10 figs.

ii. KINLOCH (J. Parlane). **An Investigation of the Best Methods of Destroying Lice and Other Body Vermin.**—*Brit. Med. Jl.* 1916. June 3. pp. 789–792.

iii. BACOT (A.). **Notes on** *Pediculus humanus* (*vestimenti*) **and** *Pediculus capitis*.—*Ibid.* pp. 788–789.

i. This paper is divided into sections: Entomological, "Lousiness," Dissemination of the Pest, Methods of Prevention and Destruction, and Recommendations. Under the first heading the morphology, habits and instincts of *Pediculus humanus* are considered. It was found that the longest period during which lice survived separation from the body was nearly nine days. The maximum time for which eggs away from the body may remain dormant is about forty days (WARBURTON); hence untreated clothing is a possible source of infestation for more than a month.

Under the second head the author describes his method of estimating the degree of lousiness of men or a unit. Ninety-five per cent. of the men of one division were infested. A prevalent term is "lousy dug-outs"; observations however showed that dug-outs play a minor part in the harbouring and dissemination of the parasite, and the same applies to blankets. Under Dissemination it is shown that the soldier himself is chiefly responsible.

Methods of Prevention and Destruction.—The best all-round vermicide tested was N.C.I. (naphthalene 96 per cent., creosote 2 per cent., iodoform 2 per cent.). The effect of one thorough application down the shirt and trousers is said by the men to last four-five days. It is recommended to use an ointment insecticide at the fork, as N.C.I. causes smarting. "Vermijelli" is effective if the body is anointed from neck to knees. Mercury ointment and sulphur proved useless. Both lice and their eggs are killed when shirts are boiled for five minutes in water, or thoroughly soaked in 1½ per cent. cresol cold for one hour. Outer garments should be hot-ironed at least once a week. In the recommendations the author outlines a plan of campaign against the pest.

ii. The first communication of Dr. Kinloch, who is Lecturer on Public Health at the University of Aberdeen, was published in the *British Medical Journal*, June 19th, 1915 [pp. 1038–41]. He also finds that N.C.I. powder is destructive to lice, and the most so of any powder tested. Of its three constituents naphthalene and creosote have each a strong insecticidal action. Commercial naphthalene is more active than pure naphthalene, apparently owing to the presence of hydrocarbons and coal tar derivatives. The inclusion of iodoform is justified by the fact that it "greatly increases the adhesiveness of N.C.I. powder for cloth," but the same object may be attained by the substitution of the much cheaper magnesium silicate. The N.C.I. mixture gradually loses insecticidal power when exposed to the air. It is too moist to be used successfully in perforated tins. It should therefore be supplied in sealed tins. The author believes that "the application of such powders twice weekly to clothing would destroy

any lice that might be present, and would practically keep the persons lice-free." While sulphur dioxide is the most efficient gaseous insecticide, as ordinarily used it cannot be depended on to kill all lice in verminous clothing. Clothing may be cleansed by immersion in petrol, all precautions against fire being taken. For the cleansing of verminous heads tetrachlorethane is advised.

iii. Observations and experiments on *P. humanus* and *P. capitis*, their habits, length of life, hatching of eggs, etc. The complete paper is to be published in the *Journal of Hygiene.*

A. G. B.

An account of a Discussion on Lice at a meeting of the Anzac Medical Association held at Anzac, Gallipoli, in November, 1915, is appended, as showing what measures were found of most value under, at times, sub-tropical conditions.*

Major Butler, D.S.O., pointed out that the fact that a large proportion of the men had no second set of clothes was a bar to bulk disinfection of clothing. He stated that the following were the most practical methods at disposal for dealing with the pest and that as many combinations as possible should be used.

"(1) Steam sterilization of clothes and blankets.

"(2) Deposition under the seams of the clothing of some substance such as *vermijelli*, or a mixture of soft soap and crude oil, or the use of some mineral oil, *e.g.*, kerosene, petrol, etc.

"(3) The use of N.C.I. powder (2 per cent. iodoform, 2 per cent. creosote and 96 per cent. naphthalene).

"(4) The use of 'Keating's' or other insect powders or a bag of sulphur worn round the neck.

"(5) Mercurial ointment on strands of wool, worn round the neck, waist and calves of legs.

"(6) Hot ironing the seams of clothing.

"(7) Individual search and picking of all clothing.

"(8) Regular changing of clothes once a week.

"(9) Regular bathing and general personal cleanliness.

"(10) The use of an emulsion of 1/2 per cent. lysol and 20 per cent. soft soap, to be lathered on the skin and allowed to dry.

"(11) The cleaning and sterilization or fumigation of blankets and dugouts (*e.g.*, by sulphur dioxide).

"(12) The immediate destruction by burning of all discarded clothes, etc."

[He did not state whether the value of each had been demonstrated in the field.]

Captain Phipson remarked that while a louse feeds it excretes a substance attractive to flies and that this might be a factor in the spread of some diseases. He believes in personal cleanliness, daily search of the clothes, baths, change of clothes once a week at least, and N.C.I. powder.

Major Battye, I.M.S. was a strong advocate of disinfection by sulphur dioxide "which, if properly carried out, killed both lice and nits."

**Medical Journal of Australia*, 1916. Apr. 22. Vol. 1. 3rd Year. No. 17. pp. 337.

Lieut.-Col. DUDGEON, Advisory Committee, stated that sulphur disinfection was greatly used among the French troops and proved very effective. "Solar oil (kerosene minus the benzine) was greatly used along the Suez Canal for rubbing into the seams of the clothes; failing this, kerosene was as good."

Col. HOWSE, D.D.M.S. thought that Medical Officers should impress on the men "the need for constant hunting and destroying of the louse."

A. G. B.

HERMS (William B.). **The Pajaroello Tick** (*Ornithodorus coriaceus* **Koch**), **with Special Reference to Life-History and Biting Habits.**—*Jl. Parasitol.* 1916. Mar. Vol. 2. No. 3. pp. 137–142. With 1 fig.

There are various stories about this tick, all agreeing in the essential detail "that the bite results in an irritating lesion which is slow to heal and often leaves an ugly deep scar." It comes from the more mountainous portions of Mexico and California. It is superficially "not greatly unlike" *O. moubata.* An account is given of the life-history and breeding habits. From the egg to sexual maturity at 26·3° C. 159 days are required for the male, and 343 days for the female. The effect of two bites in man is described. The first, on the arm, gave little immediate trouble. Three hours after the second bite "just above the shin" (a fortnight later), the entire lower leg was "tremendously swollen" and a clear lymph exuded from the lesion. The leg was lanced. Lymph exuded from this bite for several weeks, and also from that on the arm, which was apparently quiescent up to the date of the second bite. The presence of the ticks seemed to be determined by the presence of cattle. An account is given of bites inflicted in the laboratory on monkey, rabbit and mouse. In no case was there any systemic disturbance.

A. G. B.

MCCAFFREY (D.). **The Effect of Tick Bites on Man.**—*Jl. Parasit.* 1916. June. Vol. 2. No. 4. pp. 193–194.

The author, who writes from Princetown in British Columbia, near the U.S.A. boundary, describes three cases illustrating the effect of tick bite on man in that locality. In the first two the symptoms were local, suppuration occurred, and a "punched-out" ulcer was left with intense itching. He has seen only one case in which there were constitutional symptoms. A girl of eleven gradually lost the use of all her limbs, then the pupillary action to light. There were choreic movements and, later, incontinence of urine and faeces. Liquids returned by the nose. The temperature first rose one degree, then dropped below normal. On the seventh day a tick was removed "near the crown of the head." Recovery was rapid and on the third day she walked up the street. The tick was identified by Dr. S. HADWEN as *Dermacentor venustus.* [For previous summaries on this subject see this *Bulletin*, Vol. 4, p. 407; Vol. 5, p. 433.]

A. G. B.

CORNWALL (J. W.). **Some Centipedes and their Venom.**—*Indian Jl. Med. Res.* 1916. Jan. Vol. 3. No. 3. pp. 541–557. With 5 plates.

After an Introduction, in which the author points out how little has been put on record about centipedes and their venom, the paper is divided into three parts: (1) anatomical and histological, which is fully illustrated; (2) the effect of centipede bites; (3) some properties of the glandular secretion. Three species of Scolopendridae were dealt with—*Ethmostigmus spinosus*, *Rhysida* sp. ?, and *Otostigmus* nov. sp. ? The author's summary is as follows:—

"1. The orifice of the venom duct is oval and lies on the dorsal surface of the venom claw, nearer the greater curvature and at a little distance from the apex.

"2. Centipedes possess four distinct pairs of glands with ducts opening near the head:—

"(1) Anterior salivary glands.
"(2) Posterior salivary glands.
"(3) Third pair of glands.
"(4) Venom glands.

"3. Centipedes have definite ductless haemopoietic organs.

"4. The toxic action of the venom is relatively low and is a character of secondary importance. The main function of the venom gland is probably to secrete digestive ferments, not to furnish a lethal agent.

"5. Extract of the salivary and the third glands contains lysins, which are selective, anti-coagulin, diastase, invertase, and proteolytic enzymes."

A. G. B.

HOLT (Joseph J. H.). **The Cockroach: Its Destruction and Dispersal. A Comparison of Insecticides and Methods.**—*Lancet.* 1916. June 3. pp. 1136–1137.

The author experimented with a large number of substances, testing liquid volatile bodies in a wide-mouthed, glass-stoppered bottle of about 1250 cc. capacity, about one dram of the liquid being sprinkled on lint and suspended in the bottle. Dusting powders and food poisons were tested in shallow trays. The results are tabulated. It may be stated that formaldehyde, naphthalene, paraffin (burning oil), Dalmatian and Keating's insect powders and, amongst foods, arsenic and Blattis were relatively ineffective. The cockroach may exist 76 days without food. The author writes:—

"Summarising the results of the experiments as a whole, they seem to indicate that many of the substances which have been supposed to kill the cockroach have really acted by driving it away and so leading to its disappearance. Such gregarious migrations have been observed but have hitherto been otherwise explained. For quick destruction stoving with bromine or sulphur dioxide is apparently best. For domestic application the daily use of creosote, wood naphtha, or the oil of rosemary, eucalyptus, or citronella placed near the haunts of the cockroaches for two or three weeks should effectually disperse them. Where these are inadmissible on account of their smell, odourless dusting powders may be used. Of these sodium fluoride was found to be the most effective. It is also cheap and keeps indefinitely.

"These experiments may have some value as applied to insect pests. The cockroach being abundant and of large size, it has been possible to use it as an 'indicator' and to observe the results more accurately than would be possible with small insects. Other things being equal, the same results should follow in the case of many other insect pests."

[" Other things " seem rarely to be ' equal ' in the case of insect pests. It does not appear that the author tried any of the substances named in the insect's natural haunts.]

Mr. HOWARTH* of the Museum, Sheffield, criticises Dr. Holt's methods, pointing out that an insect confined in a narrow space with its favourite food may decline to eat it and relates how a large Poor-law institution was rid of the pest by putting down Blattis, not only in the kitchens but in a dark room where the cockroaches congregated. The effect is heightened by their cannibalistic habits. Surgeon BURTON-BROWN,* R.N., writes that he rid a newly-built house by putting down insect powder along the floor near the walls.

A. G. B.

BAETZ (Walter G.). **Syphilis in Colored Canal Laborers—a Resumé of 500 Consecutive Medical Cases.**—*Proc. Med. Assoc. Isthmian Canal Zone.* Apr.–Oct. 1914. [1916]. Vol. 7. Pt. 1. pp. 17–33.

The 500 cases upon which this paper is based were admitted to the adult, male negro, medical wards at Ancon Hospital from December 1911 to October 1913, a period of 23 months. Cases admitted to the surgical wards and special departments are not included. There was a total of 8,226 patients admitted during that period, so that 6 per cent. of the admissions are known to be syphilitic. The physical examinations were made by numerous physicians. " The notes made, consequently, reflect the chief reasons advanced for the established diagnosis, rather than an itemised account of the patients' total physical abnormities." The author notes that some of the diseases of temperate climates are practically unknown in the tropical native and others show peculiar variations. As an instance of the first he gives acute articular rheumatism, scarlatina and tabes dorsalis. It is shown in this paper that certain syphilitic manifestations are much more prevalent in tropical negroes than among Caucasians.

Most of the patients are brought to hospital by pain and disfigurement. " A macular syphilide will be entirely overlooked or ignored by the patient because it seldom occurs on the face, while a papulo-pustular eruption, commonly seen there, will bring the sufferer to the physician post-haste." Of the 366 cases which applied for treatment solely because of the syphilitic infection, pain, particularly nocturnal, was the chief complaint in 277. The pain was in the larger joints in 136 and in the bones in 47.

Table showing the Relative Frequency of Syphilitic Manifestations Noted in 500 Consecutive Medical Cases of Syphilis in Negroes.

	Cases.	Per cent.
1. Adenopathy	440	88
2. Genital chancre or scar	326	65
3. Arthritis, periostitis, exostoses	301	60
4. Cerebrospinal lesions	182	36
5. Skin lesions	140	28
6. Cardiovascular lesions	50	10
7. Gummata and visceral infiltrations	25	5

**Lancet.* 1916. June 10. p. 1192.

Physical Signs and Observations.—The percentage of glandular enlargement given in the table is too high to be correct as far as syphilis is concerned. Tinea cruris is well-nigh universal among the patients and accounts for much of the enlargement.

With regard to the initial lesion this was found in 38 and a scar, or scars, in 288. There is an error here in that a genital scar is more apt to result from a chancroid than from a chancre; on the other hand "it is not so rare as might be thought" to find a case of well defined secondary syphilis in which there has been no chancre.

The involvement of the bones and joints is far in excess of that which occurs in the Caucasian. Among the 301 cases there were exostoses of the tibiae in 131, acute and sub-acute arthritis and bursitis in 88, acute periostitis of the sternum and tibiae in 32, as well as in the sternum alone in 24, and tibiae alone 18. Except for skin lesions "this involvement of the osseous and articular structures was our one best sign in the diagnosis of syphilis." It is noted that acute articular rheumatism has often been diagnosed where the true diagnosis was syphilis [see this *Bulletin*, Vol. 6, p. 430].

With regard to the lesions of the nervous system there was no case of tabes dorsalis or dementia paralytica. Among the 182 cases in the table there were increased knee reflexes in 95, diminished knee reflexes in 30, unequal knee reflexes in 5, cerebral haemorrhage or softening 13, palsies of the cranial nerves in 12, ataxia or staggering gait in 7, epileptoid seizures in 6. The clinical diagnosis was confirmed by anti-syphilitic treatment or a positive Wassermann. "It is probable that a considerable number of cases diagnosed beriberi in some parts of the tropics are in reality manifestations of syphilis of the nervous system, not uncommonly in patients with a liberal admixture of chronic alcoholism."

Among the 140 skin lesions there were papular syphilides 19, papulo-pustular 14, maculo-papular 4, pustular 4. There were only 23 ulcerative lesions, but it is noted that extensive ulcerations would be admitted to the surgical wards.

Among the 50 lesions of the vascular system there were aortitis 10, aortic regurgitation 25, thoracic aneurysm 15. "While his [the negro's] endocardium seems to resist the implantation of other infectious diseases much more than that of the Caucasian, the *Treponema pallidum* finds in his aorta and the aortic valves a favourite nidus." This has been often demonstrated in cases unsuspected of syphilitic infection during life.

It is stated that lesions of the mucous membrane are not nearly so common in negroes as in whites; one of the reasons may be that the "English tropical negro" does not use tobacco as much as the Caucasian.

"Of the 366 cases of syphilis without other coincident diseases 114 showed some elevation of temperature. This amounts to over 31 per cent. Slight temperature was present in 37; intermittent in 36; high continuous in 17; occasional spikes in 14; and remittent in 10 cases. The temperatures due to iodism and mercurialism are carefully excluded from this tabulation." It is noted also that cases that resisted quinine for even as long as five or six days are excluded.

The author only found eight cases of yaws in the period covered by the paper. He writes, " the ease with which any tyro can find the specific treponema in yaws lesions is almost as characteristic as the eruption itself." He found no morphological difference between the two organisms.

Bacteriological and Serological Diagnosis.—The author has found *Treponema pallidum* in the primary lesions in a number of cases. He did not attempt the search often ; it was so disappointing and time consuming that it was given up as a practical means of diagnosis. The Wassermann test was made by Dr. BATES. The Noguchi modification was used and was positive in 385 of the total 466 cases, giving a positive result in 82·6 per cent.

The Wassermann Test in 365 Cases of 10 Distinct Groups of Syphilitic Disease.

Group of Cases.	Number examined.	Positive.	Negative.	Percentage positive.
1. Chancre	27	26	1	96·3
2. Arthritis and bursitis	73	70	3	95·9
3. Gummata	17	16	1	94·1
4. Secondary eruption .	43	39	4	90·7
5. Acute periostitis ..	42	36	6	85·7
6. Exostoses	62	47	15	75·8
7. Aneurysms	13	9	4	69·2
8. Cerebrospinal ..	50	34	16	68·0
9. Aortic disease ..	32	19	13	59·4
10. Palate destruction..	6	3	3	50·0

The negative test in the first group was undoubtedly taken too early.

Treatment.—The authors were obliged to use intensive treatment as they were unable to retain the patients in hospital for long ; the average stay was 20·7 days per man. They used proto-iodide of mercury, potassium iodide and blue ointment. For details the paper must be consulted. In 63 cases salvarsan was used as well as mercury and iodides. The author realises that an actual cure by therapy under these conditions is extremely unlikely. " The infected patients return to the wards periodically for amelioration of their acute symptoms . . . while the relieved ones return to their habitations to perpetuate and increase the disease."

[As may be gathered from the summary this paper is a mine of information.]

A. G. B.

Low (George C.). **An Interesting Case of Syphilitic Pyrexia in an Indian Native. The Value of a Positive Wassermann Reaction in Diagnosis.**—*Trans. Soc. Trop. Med. & Hyg.* 1916. July. Vol. 9. No. 8. pp. 235–241. With 6 charts.

An Indian Lascar was admitted to the Seamen's Hospital for pneumonia on March 14th ; the disease progressed favourably and the temperature fell on the 18th. On the evening of April 1st the

temperature rose and thereafter every night, to about 103°, coming down in the morning to subnormal; this continued for over a month. No cause could be found. On May 1st and afterwards a murmur and thrill were perceived over the heart. On May 10th the patient's blood was found to be strongly positive to Wassermann's reaction. He received liq. hydrarg. perchlor. and pot. iod.; the temperature promptly fell and remained normal. It is pointed out that there was no gross lesion indicative of syphilis. It is suggested that the cardiac condition was associated with a syphilitic aortitis. The moral is drawn that in a case of pyrexia of doubtful origin a Wassermann test should never be omitted. The charts illustrate the nature of the pyrexia.

A. G. B.

BAYON (H.). **The Treatment of Syphilis in African Native Tribes and among Native Workers on the Rand.**—*Trans. Soc. Trop. Med. & Hyg.* 1916. Apr. Vol. 9. No. 6. pp. 187–191. With 1 plate.

After some general observations on syphilis in African natives the author describes the method of treatment at the Rietfontein Lazaretto, eight miles from Johannesburg, for the native workers on the Rand. Treatment is compulsory and 300–400 are always there. Neosalvarsan in concentrated form is used,

"the solution being made with 7 cc. of warm tap water in the tube containing the drug, aspirated into a small syringe, and injected intravenously on the spot. In this fashion, by preparing the veins beforehand, as many as twenty cases an hour can be injected. The injections are followed by inunction every third or fourth day, and, if considered necessary, calomel is injected intramuscularly. The whole course of treatment does not take over seven weeks, as a rule, though some cases may require a longer period before they can be declared free of any symptoms or danger of recurrence."

Arsenical preparations by themselves have not been found to bring about a lasting cure.

A. G. B.

CARNOT (P.) & de KERDREL. **Sur une épidémie de pneumococcies observée chez des Annamites.**—*Bull. Mém. Soc. Méd. des Hôpit. de Paris.* 1916. June 16. Vol. 32. 3 ser. No. 19–20. pp. 935–947.

——— ——— **La Pneumococcie épidémique des tropicaux.**—*Paris Méd.* 1916. July 8. Vol. 6. No. 28. pp. 37–43.

The epidemic in question broke out among Annamites, sent to France to work in manufactories, 15–20 days after their disembarkation; they were small and poor subjects not suited for soldiers. They were landed at Marseilles when the mistral was blowing and housed, crowded together and insufficiently clothed, in buildings open to the wind.

In a "considerable proportion of cases" (50 per cent. in some series) typical pneumococci were isolated from the blood. The organism killed mice but not very rapidly, in 24–44 hours. At the beginning the mortality in the men was nearly cent. per cent. Later, when the environment and weather improved, it fell to half and after some weeks still lower.

The disease was studied clinically in more than a hundred cases, of which 18 came to autopsy. In only half the cases was there frank acute lobar pneumonia, and in those there were also diffuse lesions in

the lungs. In the other half there were congestion, acute oedema, broncho-pneumonia, haemorrhagic infarcts in both lungs. The sputa were often colourless or white ; in most cases there was also abundant froth, symptomatic of acute oedema of the lung. Pleurisy occurred in half the cases. Pericarditis was very frequent at the beginning of the epidemic. Peritonitis was seen in only four cases. Meningitis occurred three times, suppurative otitis four times. Ecchymoses were seen in several autopsies in the large and small intestine, comparable with those observed in experimental septicaemia of the rabbit.

At autopsy large liver, spleen, and kidneys were almost always found. The spleen could be felt in life 4–5 fingers breadth below the false ribs. It was red and congested; its condition was not due to old malaria, the lesions of which were recognised in some cases. Such a spleen is seen in the experimental infection of mice and rabbits. At the end of the epidemic there were a large number of large subcutaneous or deep abscesses, in which the pneumococcus was found, at the sites of remedial injections.

The authors proceed to discuss this condition of pneumococcic septicaemia, as they call it, and draw attention to the epidemic character, the diffusion and generalisation of the lesions and their gravity. They conclude that pneumococcic infection in exotics from the tropics occupies an intermediate place between the classical lobar pneumonia of France and experimental pneumococcic septicaemia of mice and rabbits. Lastly, they state that they have had interesting results from subcutaneous injections of bile, the pneumococcolytic action of which is known. Details will be published.

A. G. B.

COMMES (Ch.). **Traitement de la pneumonie chez les Tirailleurs Annamites par les injections intra-veineuses d'or colloïdal.**—*Bull. Soc. Path. Exot.* 1916. Apr. Vol. 9. No. 4. pp. 275–282. With 8 charts.

Of all the diseases contracted by the native contingents in France, the author writes, pneumonia is the one most frequently met with. In the Annamite Tirailleurs the symptoms are almost always alarming. Many cases were treated by the usual methods with scant benefit and the author resorted to colloidal gold, which he states has been used with success by Noel BERNARD in the case of the Senegalese Tirailleurs. He uses the " Collobiase DAUSSE " in intravenous injection. There is a violent reaction—sweats, sharp pain, delirium, rise of temperature, but 3–4 hours later there is defervescence (1°-2°), dyspnoea gets less, the patient expresses himself better and is ready for a second injection. Eight cases are described with charts. All recovered. Three of the patients had double pneumonia.

The author concludes that intravenous injection of colloidal gold should be given as soon as a diagnosis of pneumonia is made, that the dose may be from one to two cc. without any risk, and that it may be repeated daily; as a rule three are enough to bring the temperature down and the lung inflammation to an end.

A. G. B.

EGBERT (J. Hobart). **Epidemic Pneumonia in the Tropics.**—*New York Med. Jl.* 1916. June 10. Vol. 103. No. 24. Whole No. 1958. pp. 1125–1126.

In March, April and May 1913 at the Colombian port of Santa Marta pneumonia occurred in epidemic form in the barracks, occasioning the death of nine, seven and two soldiers in the respective months. Suppuration occurred in several instances; in some the pneumococcus was found in the blood. Santa Marta is sandy, the annual rainfall is very low and the temperature varies from 79° to 92° F. The disease was first reported as plague but inoculations practised on guinea-pigs and rats were negative. The troops were temporarily removed from the town and the barracks were cleaned and disinfected. It is noted that there were "380 soldiers and about 20 officers quartered in a building that could not well afford proper accommodations for more than half that number." Similar epidemics have occurred in the same neighbourhood before and since.

A. G. B.

CLARK (Herbert C.). **Preliminary Notes on Neoplasms found in the Inhabitants of Panama Canal Zone, with Special Reference to their Occurrence in the Negro and Mestizo,**—*Proc. Med. Assoc. Isthmian Canal Zone for the Half Year Oct.* 1914 *to Mar.* 1915. [1916] Vol. 7. Pt. 2. pp. 65–84.

This paper cannot be dealt with in any detail here. Interested persons must consult the original, in which tables are furnished for carcinoma, epithelioma, sarcoma and endothelioma, and twelve other classes of tumours, the incidence and location in West Indians, Latin Americans (mestizo), North Americans and Europeans being given, with the numbers at each decennium. It is noted that the large majority of the population consists of imported vigorous young male negroes (29,600 out of 70,000 in 1912), chiefly Jamaicans and Barbadians. There are also old negro men who have resided in the Isthmus since the French occupation. Another large group of labourers is made up of Spaniards, Italians, and other Mediterranean peoples. Females form only one-third of the population. Only the material collected at the Ancon Board of Health Laboratory is here analysed. The period of time is from 1906 to January 1915. After presentation of the statistics the views of authorities are given on the incidence of malignant neoplasms in the negro.

The summary is as follows:—

"1. The character of the Canal Zone inhabitants from which the base hospital at Ancon has drawn most of these neoplasms can be fairly well represented for the period of time under discussion, by the Canal Zone census taken in 1912. It is chiefly composed of young robust negro males.

"2. When one considers the number of malignant neoplasms found in the negroes of this series and recalls the number in the clinical records that have escaped the pathologist, it would seem fair to say that the negro under discussion has revealed a higher rate of such findings than is generally credited his race elsewhere.

"3. Malignant neoplasms have occurred in larger numbers in the earlier decades of life than is recorded elsewhere.

"The principal cause for this, perhaps, is the great preponderance of young adult people and, perhaps, the fact that sexual maturity occurs earlier here among these races than in a temperate zone. This may lay the groundwork of neoplasms of the genital and mammary systems.

"4. Gland carcinoma has been met with rather frequently in the negro race selecting as a rule the following organs in the order named: Stomach, breast, uterus, and the biliary systems.

"5. Cancer originating in epithelial structures revealed a striking incidence on the penis and cervix and in the esophagus.

"A number of instances are recorded showing occurrences about the face and mouth although by no means to the extent that would probably have occurred in a large white population.

"6. Sarcoma, in spite of the enormous number of young black adults, did not occur as often as good opinions would have led one to suspect.

"7. Neoplasms arising from the endothelium are occasionally seen, as are also the mixed tumors.

"8. Dermoid and teratoid tumors show a tendency to select the negroes in this series.

"9. Tumors of the nervous system are not very common.

"10. The prevalence of keloids and other fibroid tendencies as noted by the clinicians during this period confirm the traditional record in regard to the negro and mixed race but the pathological records contain but few good keloid specimens such as are frequently shown in the primitive African.

"11. The negro and mestizo of this series has very seldom revealed cystic degeneration or a new growth in the thyroid gland."

In the discussion Dr. DARLING remarked that neoplasms are included in all forms of life and will be found even in protozoa. He has made a collection of entamoebae which, he believes, illustrates this.

A. G. B.

WEILL (E.) & MOURIQUAND (G.). **Les maladies par carence. Carence expérimentale. Carence clinique.**—*Rev. de Méd.* 1916. Jan. Vol. 35. No. 1. pp. 1–71. With 5 figs. & 24 charts; Feb. No. 2. pp. 73–107.

This memoir traverses some well-known ground but is decidedly worth perusal. It includes the matter of a considerable number of short papers which the authors have written in the last two-three years. The observations, experiments, and arguments are clearly and logically set forth. References to previous work are not many—EIJKMANN, FRASER and STANTON, HOLST and FROELICH, FUNK, COOPER, SUZUKI, etc., but BRADDON is not mentioned.

The authors deal first with experimental deficiency (the word *carence*, from *carere*—to lack, is used to designate a food deprived of certain of its elements as well as the disease produced by the ingestion of such food); then with clinical deficiency. Under the first head they consider—(*a*) food deficiency disease in the pigeon caused by decortication or by sterilisation of cereals or pulses; (*b*) food deficiency disease in mammals (cats and rabbits); beriberi and scurvy; (*c*) growth and the "ferment" substances; (*d*) how these substances act on nutrition; (*e*) inanition and one-sided diets. They claim, as their contribution, to have shown the antiberiberic power of the cuticle of cereals other than rice and that of pulses as well as of fresh vegetables, fruits, and fresh meat, and the effect of sterilisation of undecorticated cereals, etc., sterilisation on the top of decortication producing "*hyper-carence*" [this *Bulletin*, Vol. 7, p. 377]. They think that the action of the "ferment" substances is not direct but through the ductless glands which they "activate"; they note the part taken by the pituitary gland in the metabolism of carbohydrates. They confirm

the results of other observers who have found that when vitamines are lacking an excess of carbohydrate food hastens the onset of symptoms.

The second part of the monograph deals with (*a*) deficiency disease in the child; milk, flour; (*b*) deficiency disease in the adult; the feeding of armies; fresh food in the nutrition of the soldier; war bread. Under this last head they state that, owing to the poor wheat harvest in France in 1915, MAUREL recommended for bread making the addition of 10 per cent. of pure rice flour to wheat flour, such addition not lessening appreciably the nutritive properties of the bread. The authors note that beriberi may follow a diet of which decorticated rice forms only a part and cite the diet which FRASER and STANTON gave to coolies and which produced beriberi in them. In conclusion they state that "life being necessary to life, in a rational dietary one must have the maximum that is digestible and utilisable of fresh and living food." The last 34 pages contain the protocols of 97 experiments.

A. G. B.

LEVY (William V.). **Scarlet Fever on the Canal Zone.**—*Proc. Med. Assoc. Isthmian Canal Zone for the Half Year Oct. 1914 to Mar. 1915.* [1916.] Vol. 7. Pt. 2. pp. 25–30.

The author notes that the relative frequency of the "acute infectious contagious diseases" on the Isthmus is shown by the annual reports of the Chief Sanitary Officer for the years 1907 to 1913 to be as follows: Measles, 322 cases; mumps, 183; chickenpox, 34; scarlet fever, 8. The clinical manifestations of the three first named are so typical that there is seldom any delay in making a diagnosis. The author has found in the files of the Ancon Hospital the charts of 22 cases diagnosed as scarlet fever. Many of these occurred in people just arrived by ship, but ten cases originated on the Isthmus, having occurred in individuals who had resided there from 18 months to their lifetime. There follows an account of the symptoms of these ten cases. Four were children and six adults; six were white, the others were Panamanians or Jamaicans, "probably of the lighter hued class." Complications were: arthritis (3), otitis (1), cervical phlegmon (1). A brief description is given of one case.

McCOLLUM is quoted to the effect that in the Western Hemisphere a zone of comparative immunity to scarlet fever extends from the Equator to 10° N. latitude; but that in times of pandemics occasional epidemics occur at points in the zones of comparative immunity, the Caucasian race being affected by preference. These outbreaks are accounted for by the arrival of ships having the infection on board. The disease fails to become acclimatized and dies out completely. The author agrees with McCOLLUM. The cases encountered are generally mild, persons attacked are usually whites, and the disease does not spread. It is to be remembered, however, that the exanthem constitutes the chief factor of the diagnosis and its recognition in the negro is at times very difficult. Both measles and mumps have become endemic in the Isthmus and at the time of writing these diseases were epidemic.

The author notes that "the belief is gaining that the scales are really innocuous, that the disease is contagious before desquamation has begun and after it is completed, and that the discharges from the nose, throat and ears are the agents of transmission." At Ancon measles, mumps, scarlet fever, and diphtheria are treated in the same ward, "somewhat isolated." There has been no case of secondary infection except one—a mumps patient who contracted measles.

A. G. B.

SCOTT (G. Waugh). **A Case of Acute Rheumatism occurring in the Tropics, with Notes on the Heart by Harold T. Skae, M.D.**—*Lancet.* 1916. Jan. 15. pp. 132–133.

The author, who writes from Perak, F.M.S., refers to CLARKE'S paper on the geographical factor in rheumatic fever [see this *Bulletin*, Vol. 6, p. 429]. The case here recorded is given in considerable detail; the following are excerpts:—

"A Tamil boy, aged 10 years, was admitted to Kamuning Estate Hospital on June 28th, 1915, complaining of acute pain and swelling of both ankle-joints. . . . The heart impulse was very diffuse and produced a wavy motion, easily visible over the cardiac region. The apex beat was situated half an inch below and one inch outside the nipple line. On auscultation there was present a loud blowing systolic murmur. . . . On admission the temperature was 100° F. . . . Repeated blood examination gave negative results. No evidence of intestinal parasites was found on examining the faeces, either macro- or microscopically. . . . On the second day the temperature remitted, but rose again to 100° on the third day, and thereafter for three weeks it fluctuated, varying as to the first ten days between 99° and 101°, and afterwards from 98° to 100°. On the third day the case was seen and examined by Dr. McLean, who confirmed the presence of a very definite pericardial friction sound. . . . On the morning of the fifth day the left knee became swollen and painful. The pain in the left ankle had by this time subsided. By the tenth day the right knee had become very much swollen and was very painful. . . . Mr. Clarke saw the patient on the tenth day, but did not agree with the diagnosis on account of the absence of excessive sweating and anaemia. The presence or absence of sweating before this day had not been noted, but from then onward sweating was a marked feature."

On the 18th day and on three later occasions Dr. Skae reported on the heart condition. Pericardial friction is noted again on July 27th. The cardiac condition was found "indicative of some degree of endocarditis of the mitral valve. . . . There can be little doubt that the cause of the cardiac lesions was acute rheumatism."

There was no evidence of gonorrhoea. General pyaemia, rheumatoid arthritis, tuberculosis, and hereditary syphilis are discussed and put out of court. The author cannot see how this disease can be regarded as anything else than acute rheumatism.

A. G. B.

ISMAIL (Abd-el-Aziz). **Hysterical Anaesthesia in Egyptians.**—*Practitioner.* 1916. Feb. Vol. 96. No. 2. [No. 572]. pp. 218–220.

The author, who is Resident Medical Officer at the Kasr-el-Ainy Hospital, Cairo, has in the last three years seen 60 cases of hysteria, chiefly as hospital out-patients. He says it is far more common in the Sudanese than in the Egyptians [in which case the title is unfortunate]. Hysterical fits are often observed, chiefly of the hysteroid type

(Gowers). Of the hysterical stigmata aphonia and anaesthesia are the commonest. Anaesthesia of the epigastric region is present in the majority of cases so that the author looks for it whenever hysteria is suspected ; it is accompanied by a sense of obstruction in the throat. The epigastric region is tender and within a certain region the patient does not feel either touch or pain. The author suggests two causes for the anaesthesia of the epigastrium : (1) the idea still present in the public mind that the heart is the seat of the emotions and the belief that it lies in the epigastrium ; (2) pain in the epigastrium is the commonest complaint among the out-patients and this symptom is caught by the hysteric. A smaller number of patients had local anaesthesia other than epigastric ; this was accompanied by motor phenomena. Thus paralysis in one arm is invariably accompanied by anaesthesia of the part, aphonia by anaesthesia of the tongue, etc. This constant association is attributed to the idea that sensory changes must accompany motor disorders. The sight of the numerous lepers of Egypt with loss of sensation must often furnish a symptom for the neurotic. Anaesthesia unaccompanied by motor phenomena was met with only in two cases.

A. G. B.

CARINI (A.). **Un cas de Blastomycose péritonéale à** *Coccidioides immitis.—Bull. Soc. Path. Exot.* 1915. Vol. 8. No. 10. pp. 712–715. With 1 plate.

The author notes that the first reports on blastomycosis in Brazil were published in 1908 (LUTZ, CARINI) and that several similar cases have been since observed, about 40 in all. The initial lesion in each case was on the skin or the mucosa of the mouth, nose or throat. Secondary localisations in the viscera have been seen in many people and proved at autopsies. In the present case there was no lesion on the skin or mucosa ; the disease appears to have attacked the viscera directly.

The case was that of a man of 21 who lived in the state of Sao Paulo. His illness began with vomiting, malaise, fever, and pains in the right iliac fossa. Appendicitis was diagnosed and the patient consulted Dr. SENG at Sao Paulo. This surgeon found a swelling of the size of a goose's egg in the right iliac fossa ; the lungs, liver and spleen appeared to be normal ; there was no enlargement of the lymphatic glands. The abdomen was opened and it was found that the ascending colon was fixed to the pelvis by a tumour which had invaded the retroperitoneal lymphatic glands. It was not possible to extirpate this tumour so a piece of one of the glands was removed. This was examined microscopically and was found to contain numerous giant cells, such as those figured, in the interior of which there were parasites, round bodies 5 to 25μ in diameter with a double contour. Many were multiplying by sporulation. A diagnosis of blastomycosis was therefore made and iodide of sodium prescribed, but this does not appear to have been of much benefit.

The author has only found one similar case in medical literature, observed in France by BLANCHARD, SCHWARTZ and BINOT ; the parasite was a *Saccharomyces*. He has however learned of similar cases in Brazil in one of which the parasite was *Coccidioides immitis* ;

in this an amoebic ulcer appears to have been the point of entry (HABERFELD). This form of the disease is difficult to diagnose owing to its resemblance to tuberculosis and malignant tumours.

A. G. B.

HARMER (Sidney F.). **On a Leech removed from the Nasal Cavity of a Soldier from the Dardanelles.**—*Jl. Roy. Nav. Med. Serv.* 1916. Jan. Vol. 2. No. 1. pp. 34–36.

The author notes that the warmer countries round the Mediterranean are inhabited by a species of leech, *Limnatis nilotica*, which has a habit of effecting entrance into the nasal cavities, pharynx and larynx of man, horses and other animals. The army of Napoleon returning from Syria to Egypt suffered severely. The patient in this case was admitted to the Beach Hospital at Gallipoli on August 21st for shrapnel wounds. On the 23rd he began to suffer from nose bleeding, headache and pains in the stomach. The case was presumably diagnosed as enteric. He was transferred to a hospital ship, and on September 10th arrived at the Military Hospital, Tooting, still suffering from the above symptoms. Three days later a leech was observed and extracted from his nose by the nurse. It proved to be *Limnatis nilotica* and, after preservation in spirit, measured 3½ inches in length and half an inch in thickness. The author gives a summary of our knowledge of hirudiniasis. The leech usually attaches itself near the posterior nares behind the soft palate.

This species of leech is an inhabitant of fresh water and is extremely common, in certain districts, in pools and wells. It is believed to be taken in when drinking, especially at dusk, and is stated to be ordinarily not thicker than a horse hair. Its bite produces copious bleeding. It may be removed by saturating a piece of cotton wool with a 30 per cent. solution of cocaine and bringing it in contact with the parasite; it is well to place the patient on a bed with his head hanging over the edge so that the leech may not pass down the trachea. In districts where leeches are common drinking water should be strained through fine muslin or boiled. Similar precautions must be taken to protect horses and mules.

A. G. B.

LOW (George C.). **An Interesting Case of Eosinophilia.**—*Trans. Soc. Trop. Med. & Hyg.* 1916. Jan. Vol. 9. No. 3. pp. 77–81.

The patient was from India; apart from many pigmented moles and "linear pigmented marks" on the skin he was organically sound. The differential count was as follows:—

	No. counted.	Per cent.	No. per c.mm.
Polymorphonuclear.. ..	118	23·6	2,454·4
Large Mononuclear.. ..	13	2·6	270·4
Lymphocytes	121	24·2	2,516·8
Eosinophiles	244	48·8	5,075·2
Transitional	3	·6	62·4
Mast Cells	1	·2	20·8
	500	100·0	10,400·0

He had therefore an absolute and relative increase of eosinophiles of a very high degree. The eosinophilia had been already detected in India, and no cause found. No parasites could be found in the blood or faeces. Filariasis, hydatids, guinea-worm and trichinosis were considered; the last was a possibility. The pigmented warts he had had from childhood.

Dr. WENYON has recorded a case from the Sudan in which the eosinophiles reached 70 per cent.; here there was a chronic skin eruption taking the form of localised thickenings with much irritation.

The author finds that "a certain moderate degree of eosinophilia" is not an uncommon occurrence in the blood of patients from the tropics not suffering from any definite disease. He himself once had a case in which the eosinophiles were always between 14 and 20 per cent.; it came to autopsy and no cause could be found. Details of the case from India are appended.

A. G. B.

Book Reviews.

Niles (George M.), [M.D.]. **Pellagra. An American Problem.**—261 pp. Demy 8vo. 2nd Edition. Illustrated. 1916. Philadelphia and London: W. B. Saunders Co. [Price, Cloth $3.00 net.]

To the physician interested in Pellagra the second edition of Dr. Niles's work should prove both interesting and valuable. After a detailed and critical survey of the general history of pellagra, the author proceeds to describe its appearance and incidence in America where it has of late made rapid progress. While the disease is treated on general lines as a wide spread malady occurring in almost all countries, the chief purpose of the present volume is to deal with pellagra as seen in America, and to endeavour to contribute something to our knowledge of what has recently become, for America, a very serious problem. The vexed question of the etiology of pellagra is discussed from various points of view and a fair and broad-minded attitude assumed towards the many theories that have from time to time been advanced to explain the causation of this dread disease. The results of the recent work of Dr. Goldberger, special U.S. agent for the study of Pellagra and the reports of the Thompson-MacFadden Pellagra Commission are included. On the whole, the author takes the view that pellagra is not a parasitic disease and rejects Sambon's claims regarding the part played in its etiology by the *Simulium reptans*. He is inclined to accept a modification of Lombroso's dictum that "in pellagra we are dealing with an intoxication produced by poisons developed in spoiled maize through the action of certain micro-organisms in themselves harmless to man." For the words "spoiled maize" Dr. Niles would substitute "spoiled carbohydrates" and this amplification appears to him sufficient to cover the etiology of pellagra in the light of our present knowledge.

It is questionable whether this view of Dr. Niles will receive general acceptance. Modern research work raises doubts as to the necessary connection of spoiled maize or carbohydrates with pellagra. The old idea that the nutritive value of any particular food could be indicated in terms of its content of protein, fat and carbohydrate has recently been exploded, and with it we must cast aside many of the assertions made by the older writers who stated that unspoiled maize was a perfect food. Such statements were based chiefly on the results of chemical analyses which we now know are insufficient to indicate whether or not a given substance contains all the essentials necessary for life. Since this defective method of investigation appeared to prove that such a substance as maize was a perfect food, it was but natural to conclude that, in order to cause pellagra, the maize must be spoiled. This, no doubt, helped to perpetuate the idea that pellagra originated as the result of spoiled food. After all, the connection of maize or carbohydrates (spoiled or unspoiled) with pellagra may be more or less accidental, and the results of recent research undoubtedly point to the probability that pellagra is a disease brought about by the absence from the diet of certain essential constituents. No doubt, there are still many apparent objections to this view, but similar difficulties were manifest in the case of beriberi; in this disease, for instance, many observations pointed strongly to its apparently infectious nature, and yet to-day nobody doubts that beriberi is a manifestation of the lack of certain essential substances in the diet. If spoiled food plays any part in the etiology of pellagra, it is more likely that this is due to a destruction of certain constituents, rather than to the production of toxic substances. The whole question is, however, still obscure and at present permits of no dogmatic observations.

One of the most useful chapters in the book is taken up with a description of the symptomatology and clinical course of pellagra. The author justly points out that here we have a disease, whose symptoms and clinical history present a panorama more varied than is perhaps encountered in any other morbid condition. These varied manifestations often render the diagnosis difficult or uncertain, and useful hints from the author's clinical experience are given which should prove of value in dealing with obscure cases. The typical symptoms of pellagra are described under the

three usual headings—gastric disturbances, skin lesions and nervous phenomena—symptoms which appear to be present to some extent in every case though there does not appear to be any well defined order of occurrence. Emphasis is laid on the fact that the course of the disease and the exact form which the symptoms take are dependent on such factors as age, race, occupation, previous state of health, environment and a host of other modifying conditions; these points must all be carefully considered in estimating the true nature of the malady and here Dr. Niles furnishes useful help. A number of good photographic reproductions of the different skin lesions encountered in the disease are given, which of themselves materially enhance the value of the book for diagnostic purposes. Complications and prognosis are also discussed. After surveying the general symptomatology and clinical history of the disease the author adopts the useful measure of devoting a short chapter to a description of the clinical histories of actual cases taken from widely scattered localities. By this means it is hoped that the reader may obtain a broader conception of the "disease entity" than would otherwise be the case. A short chapter is devoted to pathology and morbid anatomy. As might be expected in a condition presenting so many manifestations, the pathological lesions are by no means constant. Treatment receives a good deal of attention and the general methods adopted—hygienic, dietetic and medicinal—are clearly indicated while a chapter of 18 pages is devoted to a discussion of prophylaxis. In the present state of our knowledge, treatment is necessarily based on more or less general lines, but the clinician will find here all the principal modern ideas and methods at present in vogue. The book ends with a chapter describing some resent experiments on animals and deductions therefrom.

On the whole, Dr. Niles has succeeded in presenting a very readable volume which, though dealing specially with pellagra as seen in America, cannot fail to be of much value and assistance to all medical men interested in the disease. At the present time, when isolated cases of pellagra are from time to time being diagnosed in places where its presence was hitherto unsuspected, the present work should be of much service.

H. Maclean.

HERMS (William B.). **Medical and Veterinary Entomology. A Textbook for Use in Schools and Colleges as well as a Handbook for the Use of Physicians, Veterinarians and Public Health Officials.** —xii + 393 pp. 8vo. With 228 figs. 1915. New York: The Macmillan Co. [Price 17*s*. net.]

This is essentially a practical book, not burdened with much descriptive or morphological or taxonomic detail, but greatly focussing attention upon life-history and pathogenic activities, and thoroughly examining specific methods of keeping noxious insects at arm's length—the technique of "insect control."

The first five chapters deal briefly with matters of general interest, such as the pathological and sanitary significance of insects, the scope and lie of preventive measures, the broad outlines of classification, the modes and conditions in which insects figure as infective agents, and also with some simple features of those portions of the insect-anatomy—the digestive tract, the salivary glands, and the mouth-parts—which are most concerned in the manipulation and transmission of the morbid material.

The next twelve chapters deal with insects of admitted or suspected pathogenic importance, grouped according to practical convenience; then follow two chapters on ticks and mites, and last of all a chapter on the Arthropoda which are primarily obnoxious by their venomous secretions.

Of the chapters dealing with insects that provoke or disseminate disease the fullest are the two allotted to the common house-fly; all the relevant biological facts are clearly set forth, the contaminative proclivities and the specific infective powers of the insect are recounted at full length, and the methods of controlling and preventing the fly-peril are described and discussed very thoroughly. In the front of all methods the author sets

popular instruction. Another good chapter is that on Myiasis, in which all the maggots that find any sort of footing in the inward parts of man and domestic animals, whether as true parasites or by accidental lodgment, are reviewed in a comprehensive and thoroughly practical fashion, though the maggot of *Apiochaeta ferruginea,* which seems to be a very persistent parasite of the human intestine, is not included in the list, and no reference is made to the manner in which the eggs of *Dermatobia* are said to be transported by specific mosquitoes.

There are three chapters on mosquitoes, of which that on mosquito control is excellent, all essential and reasonable measures being described and critically estimated. The author pillories the honest word "*larvicide,*" substituting for it the strange compound "*larvaecide.*" But the former word is, as Bardolph said of "accommodate," a word of exceeding good command, being formed, as all the world knows, in strict accordance with etymological rule, and on the classical analogy of *tubicen* from *tuba, pennifer* from *penna, laniger* from *lana, libripens* from *libra,* etc. The natural history of mosquitoes is something sketchy, and the classification is a very perfunctory piece of work. The inclusion of verruga, along with figures and a brief account of *Phlebotomus,* in the chapter headed "Mosquitoes as Disease-Bearers" is not a little puzzling.

The chapter on blood-sucking Muscids contains a good account of *Stomoxys* and its problematic relations to disease, and also pays sufficient attention to *Haematobia*; but of the genera foreign to America *Glossina* alone receives notice, and that somewhat scant.

The other component chapters on Cockroaches and Beetles, on Lice, on Bed-bugs and Reduviidae, on Simulidae and Tabanidae, and on Fleas and Hippoboscidae, contain much useful information as to habits and life-history, general economic and pathogenic importance, exact connexion with specific disease, hurtfulness *in posse,* and methods of destruction and prevention.

The most noteworthy features of the chapter on ticks are the full exposition of the methods of exterminating and circumventing these dangerous creatures, and the detailed accounts of four notorious species, *Boophilus annulatus, Dermacentor venustus, Argas persicus,* and *Ornithodorus moubata,* and the specific diseases for which each is responsible.

The book is liberally illustrated, and the figures though unpretentious are clear and characteristic, with very few exceptions ; the most amicable reviewer has not heart to bear with No. 108 (larva of *Simulium*) in its dissipated defiant attitude to nature, and No. 138 (mouth-parts of a tsetse-fly).

It is to be noted that *Cyclops* in its association with guinea-worm is not comprehended in the book, but probably the omission is intentional, although the fathers of Entomology included Crustacea in their province.

Taking the work as a whole, although it does not profess to be a comprehensive treatise, and although so far as its purely entomological framework goes it has some geographical limitations which perhaps carry it short of *all* the requirements of medical men whose interests lie outside the zoological regions of the New World, yet in respect of all general principles and particularly of those that underlie prevention and control, it will be found universally useful.

A. Alcock.

DONALDSON (Henry H.). **The Rat. Reference Tables and Data for the Albino Rat** (*Mus norvegicus albinus*) **and the Norway Rat** (*Mus norvegicus*).—*Memoirs of the Wistar Institute of Anatomy & Biology.* No. 6. v + 278 pp. With 31 charts. 1915. Philadelphia. [Price $3.]

The scope of this book may be indicated by an extract from the preface. The author writes :—

"An introduction treats of the rat as a laboratory animal, indicates the methods of gathering the data, and also gives examples of our use of the tables. This is followed by an outline of the classification of the common

rats and by a brief statement of the history of the rat since it arrived in western Europe.

"The rest of the book falls into two parts. The first part deals with the domesticated albino rat—concerning which we have the larger amount of information.

"The second part deals in a similar way with the wild Norway rat—the form from which the Albino has been derived. In connection with each part the several reference tables and the formulas employed for them and for the corresponding graphs are given, and at the end of the book a list of papers on the rat is added. . . . It is hardly necessary to add that in most directions our information is fragmentary."

The value of such a book in the laboratory is obvious. Of general interest is the section on early records and migrations of the common rats. *Mus rattus*, the house rat (which is not dealt with in this book), is probably indigenous to India; the variety *alexandrinus* is now more frequent in warm latitudes. The house rat entered Western Europe in appreciable numbers after the twelfth century or earlier. The Norway rat did not reach Western Europe till 1727–1730, so that the European rat of the middle ages (of Pied Piper fame and of the great plagues) was *Mus rattus*; *M. rattus* was brought to South America early in the sixteenth century. The Norway rat, following the house rat after six hundred years, has become dominant in Western Europe and the northern United States, by reason of its pugnaciousness and, probably, the progressive disuse of wood as a building material. The common albino rat is a variety of the Norway rat; its place and time of origin is uncertain.

A. G. B.

Reprints and Pamphlets received :—

DYER (I.). The Sex Question in Public Health.—*Southern Med. Jl.*, 1916.

DYER (I.). The Control of Syphilis. Discussion in Syphilis Symposium Congress of American Physicians and Surgeons, Washington, D.C., May 9th, 1916.—*Interstate Med. Jl.*, 1916.

GAY (F. P.). The Contribution of Medical Science to Medical Art as shown in the Study of Typhoid Fever.—*Univ. California Chron.*, 1916.

GAY (F. P.) & CHICKERING (H. T.). Treatment of Typhoid Fever by Intravenous Injections of Polyvalent Sensitized Typhoid Vaccine Sediment. Studies in Typhoid Immunization VI.—*Arch. Intern. Med.*, 1916.

GAY (F. P.) & STONE (R. L.). The Fate of Various Antibodies in the Precipitin Reaction.—*Jl. Immunology*, 1916.

HALL (I. C.). Testicular Infusion Agar-A Sterilizable Culture Medium for the Gonococcus.—*Jl. Bact.*, 1916.

LONGMAN (Heber A.). Notes on Classification of Common Rodents. With List of Australian Species.—*Commonwealth of Australia, Quarantine Service Publication* No. 8.—28 pp. With 7 figs. 1916. Melbourne : Govt. Printer.

MEYER (K. F.). The Relation of Animal to Human Sporotrichosis. Studies on American Sporotrichosis III.—*Jl. Amer. Med. Assoc.*, 1915.

Note.—On direct application (not through agents or booksellers) any of the foregoing reprints or pamphlets will be sent on loan to any part of the world, the Bureau paying outward postage.

Book received.

SIMPSON (W. J.) [C.M.G., M.D., F.R.C.P.] The Maintenance of Health in the Tropics.—2nd Edit. xi+174 pp. crown 8vo. With 26 figs. 1916. London : John Bale, Sons & Danielsson. [Price 3*s.* 6*d.*]

BUREAU NOTICES.

Works in the Bureau Library may be consulted between 10 and 5.

The Director can be seen between 10 and 1; for a later hour an appointment should be made.

The Director will be glad to receive early copies of works or reprints on Tropical Diseases for notice in the *Bulletin* and for the Library. To be addressed—Tropical Diseases Bureau, Imperial Institute, London, S.W.

(Telephone:—Kensington, 5188.)

The Annual Subscription for the Tropical Diseases Bulletin is TWENTY-ONE SHILLINGS post free.

Subscriptions should be sent to Messrs. BAILLIÈRE, TINDALL and COX, 8, Henrietta Street, Covent Garden, London, W.C., who are also the advertisement agents.

Cloth cases for binding the Bulletin can be obtained from Messrs. BAILLIÈRE, TINDALL and COX, price One Shilling and Sixpence post free.

The Tropical Diseases Bureau publishes also the TROPICAL VETERINARY BULLETIN, quarterly, Annual Subscription Ten Shillings, single numbers Three Shillings post free; to be obtained from the above agents.

TO ADVERTISERS.

To ensure the insertion of an Advertisement in any particular number of the Bulletin the copy must reach Messrs. BAILLIÈRE, TINDALL & COX not later than fourteen days before the date of publication.

CONTENTS.

PELLAGRA.

PAGE.

LAVINDER: History of Pellagra 331
SILER, GARRISON & MACNEAL: Introduction to Report of the R. M. Thompson Commission 331
DAVENPORT; MUNCEY: The Hereditary Factor in Pellagra .. 332
SILER, GARRISON & MACNEAL: Pellagra in Spartanburg County, S. C. 333
JOBLING & PETERSEN: The Epidemiology of Pellagra in Nashville 334
PERDUE; PARRISH; BEALL; WINFIELD: Pellagra in the U.S.A. 335–6
BALP: Maize and Pellagra in Brazil 336
ANTONINI: Anti-Pellagra Measures in Italy 337
RONDONI: Etiology, Prevention and Cure 338
ALPAGO-NOVELLO: The History of Pellagra in Italy 338
CALVERT: A Case of Pellagra in India 338
GOLDBERGER; MACNEAL; WOOD; VEDDER: The Relation of Pellagra to Unbalanced Diet 339–40
BOND: Causation and Treatment of Pellagra 341
van ZANDT: Objections to the Diet Theory 341
BLOSSER: Sensitization to Maize and Sugar-cane Products .. 342
AULDE; FAIRBANKS; MODINOS; YARBROUGH: Views on Etiology 342–3
SWANSON: Differential Diagnosis of Skin Manifestations .. 344
RIGHETTI; SANDY; O'MALLEY: Pellagra and Mental Disease 344–5
LORENZ; RIDLON: Dietetic Treatment 346
BOOTH; SECCHIERI; COLE: Treatment by Cacodylate of Sodium, Trisodium Citrate and Vermifuges 346–7
HUNTER, GIVENS & LEWIS: Metabolism in Pellagra 347
RIDLON: Laboratory Examinations 348
LORENZ: The Cerebro-Spinal Fluid in Pellagra 349
KOCH & VOEGTLIN: Chemical Changes in the Central Nervous System 350
VOEGTLIN: Bread as a Food 351
STILES: Rabbits and Hares in the Prevention of Pellagra .. 352
PANIZZI: Preventive Measures in Udine 352

MALARIA.

PARROT: Malaria in Algeria 353
CARTER: Malaria Survey of Impounded Waters 353
U.S. PUBLIC HEALTH REPORTS: Whirligig Beetles and Anopheles 354
KING: Development of Malaria Parasites in Three American Anopheles 354
MARZINOWSKY: New Species of Malaria Parasites 354
BRUG: Black Spores in Infected Mosquitoes 355
BARLOW: Treatment by Intravenous Mercuric Chloride .. 355
DENNYS: Iron and Arsenic in Malaria 356
DUNLEY-OWEN: Administration of Quinine 357
SERGI: An Anti-Malarial Campaign in the Winter 357
SERGENT: Bonification of a Malaria-Stricken Ravine 358
FOY: The Spelling of Cinchona 358

BLACKWATER FEVER.

STEPHENS: The Duration of Haemoglobinuria 359
OTIS: Blackwater Fever and Entero-Colitis 359

UNDULANT FEVER.

SERGENT, NÈGRE & BORIES: An Epidemic in Algeria 360
NICOLLE & GOBERT: The Milch Goats of Tunis and Undulant Fever 361
IZAR: Spontaneous Infection in Domestic Animals 362
LABONNOTTE & DELANOË: Undulant Fever in Morocco .. 363
CORTESI: Undulant Fever in Ravenna 363

Contents—*continued.* PAGE.

MAXWELL: Undulant and Paratyphoid Fevers in Fukien, China 363
LUNGHETTI: Pathological Changes in Undulant Fever .. 364
CASTRONOVO: Haemorrhage in a Case of Undulant Fever .. 364
IZAR: Mutations of *M. melitensis* in Contact with Salts of Quinine 365

YAWS.

RICONO; KNOBEL; Yaws in South Africa 366
CASONI: Yaws in Tripoli 367
Van den BRANDEN: Treatment by Cupric Salvarsan 367
BERGEN: Treatment with Salvarsan 367
RUTHERFORD: Treatment with Salvarsan and Arsenious Iodide 368
THOMSON: Treatment by the Castellani Method 369

MISCELLANEOUS.

MADRAS: Annual Report of the General Hospital for 1915 .. 371
SMITS: Report from the Hospital of the Sennah Rubber Company, Sumatra 372
SITANALA; SWELLENGREBEL: Report of an Expedition to New Guinea 373
De VOGEL: The Sanitary Condition of the Port of Sibolga, Sumatra 373
THÉZÉ: Disease in French Guiana 374
ALGERIA: Report of the Pasteur Institute, 1915 377
HENÃO: Report of the Antioquia Railway, Colombia 377
ARCHIBALD, HADFIELD, LOGAN & CAMPBELL: Diseases of the Troops in the Dardanelles 378
JOHNSTON: An Entomological Survey in Nigeria 380
CARTER: Three African Midges 380
MACFIE & INGRAM: New Culicine Larvae from the Gold Coast 381
GRIFFITTS: A Mosquito Collecting Device (fig.). 381
BALFOUR: Fly-Traps for Camps 382
TOWNSEND: A New Generic Name for the Screw-Worm Fly .. 382
PEACOCK; KINLOCH; BACOT: Lice and their Destruction .. 383
HERMS: The Pajaroello Tick 385
McCAFFREY: Tick Bites in Man in British Columbia 385
CORNWALL: Centipedes and their Venom 386
HOLT: The Destruction of Cockroaches 386
BAETZ; LOW; BAYON: Syphilis in Natives 387–90
CARNOT & de KERDREL; COMMES: Pneumonia in Annamites in France 390–91
EGBERT: Epidemic Pneumonia in the Tropics 392
CLARK: Tumours in the Canal Zone 392
WEILL & MOURIQUAND: Deficiency Diseases 393
LEVY: Scarlet Fever in the Canal Zone 394
SCOTT: "Acute Rheumatism in Malaya" 395
ISMAIL: Hysterical Anaesthesia in Egypt 395
CARINI: A Case of Peritoneal Blastomycosis 396
HARMER: A Case of Hirudiniasis 397
LOW: A Case of Eosinophilia 397

BOOK REVIEWS.

NILES: Pellagra; an American Problem 399
HERMS: Medical and Veterinary Entomology 400
DONALDSON: The Rat 401

The INDEX and TITLE PAGE to VOLUME 7.

Persons who receive the *Bulletin* gratis should, if they wish to have this, apply to the Bureau.